Revalco®

Made in Italy

low voltage transformers and shunts

LOW VOLTAGE TRANSFORMERS

GENERAL DESCRIPTION 1

TECHNICAL SPECIFICATIONS 2

SUMMARIZING TABLES 4

ACCESSORIES 9

CURRENT TRANSFORMERS - NANO SERIES
Three phase 10
Single phase 10

MINI SERIES - CURRENT TRANSFORMERS 19

SMALL SERIES - CURRENT TRANSFORMERS 21

STANDARDS SERIES - CURRENT TRANSFORMERS 27
Protection current transformers 34
Dual ratio current transformers 37
4/20mA DC output current transformers 40
20mA DC and 10V DC output current transformers 42
4/20mA DC output current transformers external supply 45

TOROIDAL CURRENT TRANSFORMERS 47

“HALL” EFFECT - CURRENT TRANSFORMERS 48

SUMMATION CURRENT TRANSFORMERS 50

SPLIT CORE CURRENT TRANSFORMERS 51

OVERLOAD CURRENT TRANSFORMERS 53

RATIO CORRECTING CURRENT TRANSFORMERS 54

CURRENT TRANSFORMERS FOR ELECTRONICS 55

VOLTAGE TRANSFORMERS 56

SHUNTS

SHUNTS 61

APPLICATION
The CT makes it possible to measure high current values, and indicate, these using instruments of much lower ratings. Owing to the high costs of the cable, we recommend the use of a CT for current measurement above 40A (unless otherwise specified.)

THERMIC CURRENT (I_{th})
Is the highest primary current (effective value) that the CT can support for 1 second, without damage, owing to excessive overloads, with secondary short circuited.

DYNAMIC CURRENT (I_{dyn})
Is the highest primary current (peak value) that the CT can support for 1 second, without damage, owing to electromagnetic efforts, with secondary short circuited.

HIGHEST VOLTAGE LIMIT RANGE
Is the highest voltage (effective value) that the CT can support.

TEST VOLTAGE
Is the voltage that the CT can support (at industrial frequency, for the insulation reference) for 1 minute between primary and secondary.

SATURATION FACTOR(Fs) - SAFETY FACTOR(n)
Is the ratio between the primary current value that causes the magnetic core saturation and the primary nominal current value.
The lower is the "n" value, better the instrument is protected.

RATED BURDEN OF COPPER WIRES BETWEEN INSTRUMENT AND CT

Secondary of 5A

Section of cable mm²	Power (two poles) VA					
	Distance					
	1 m	2 m	4 m	6 m	8 m	10 m
1,5	0,58	1,15	2,31	3,46	4,62	5,77
2,5	0,36	0,71	1,43	2,14	2,86	3,57
4	0,22	0,45	0,89	1,34	1,79	2,24
6	0,15	0,30	0,60	0,89	1,19	1,49
10	0,09	0,18	0,36	0,54	0,71	0,89

Secondary of 1A

Section of cable mm²	Power (two poles) VA					
	Distance					
	10 m	20 m	40 m	60 m	80 m	100 m
1	0,36	0,71	1,43	2,14	2,85	3,57
1,5	0,23	0,46	0,92	1,39	1,85	2,31
2,5	0,14	0,29	0,57	0,86	1,14	1,43
4	0,09	0,18	0,36	0,54	0,71	0,89
6	0,06	0,12	0,24	0,36	0,48	0,60
10	0,04	0,07	0,14	0,21	0,29	0,36

LOAD ON COPPER BARS according DIN 43670 and 43671 standards

Bar dimension mm	Nominal current (In) A		
	1 bar	2 bars	3 bars
20x5	325	560	
20x10	427	925	1180
30x5	379	672	896
30x10	573	1060	1480
40x5	482	836	1090
40x10	715	1290	1770
50x10	852	1510	2040
60x10	985	1720	2300
80x10	1240	2110	2790
100x10	1490	2480	3260

ACCURACY CLASS
- Accuracy class 0,5 for kWh-meters
- Accuracy class 1 for measurement and non tariff kWh-meters
- Accuracy class 3 for relays and protection

The current and the angle errors according IEC 185, VDE-0414 and UNE-21028 standards, are as follows:

Class	Ratio error limits in %			
	0,05 In	0,2 In	In	1,2 In
0,5	± 1	± 0,75	± 0,5	± 0,5
1	± 2	± 1,5	± 1	± 1
3	from 0,5 In to 1,2 In = ± 3			

Class	Angle error limits in %			
	0,05 In	0,2 In	In	1,2 In
0,5	± 1,8	± 1,35	± 0,9	± 0,9
1	± 3,6	± 2,7	± 1,8	± 1,8
3	no prescription			

ERRORS CURVE

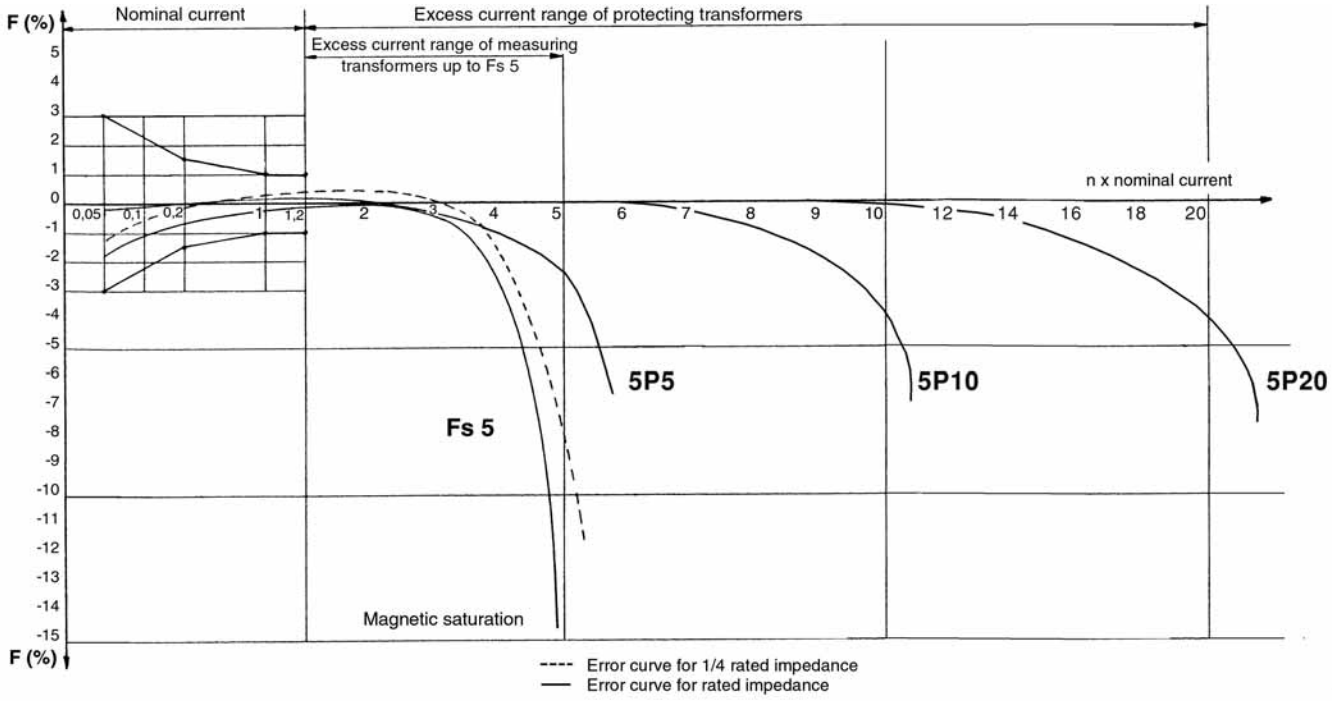

TECHNICAL SPECIFICATIONS

- Case in ABS -V0 resin
- Secondary current: 5A standard (other secondary rating on request)
- Maximum service voltage for insulation: 1,2 kV (0,72 kV for mini series and TCS13 - 16 - 18 - 25 - 26 - 32 - 33)
- Testing voltage. 6 kV at 50 Hz for 1 minute (3 kV for mini series and TCS13 - 16 - 18 - 25 - 26 - 32 - 33)
- Nominal thermic short circuit current: (I_{th}): 60 IpN for 1 second (40 IpN for types TARPD / TARPDE)
- Nominal dynamic short circuit current: (I_{din}): 2,5 I_{th} for 1 second
- Permanent overloading 120% Icth
- Safety factor(Fs): from ≤ 2 to ≤ 15 following the types and the range
- Normal functioning frequency 50/60 Hz
- Construction according to the CEI 38-1, IEC 185, VDE 0414, UNI 21028
- Insulation in air, Class E (IEC 185)
- Terminals: primary P1 - P2 (K - L) secondary s1 - s2 (k - l)
  P1 (K) primary winding input P2 (L) primary winding output
  s1 (k) secondary winding input s2 (l) secondary winding output
  For double ratio on secondary: s1 - s2 = low value
  s1 - s3 = high value

  Material: Brass (CuZn37).
  The screws M4x6 have: torsion value= 1,9 Nm, traction value = 440 N/mm² and elasticity limit = 340 N/mm²
- Degree of protection: IP30
- Conditions when used: Ambient temperature -20°C ÷ +40°C, for types TARPD1 and TCS33; -20°C ÷ +50°C for all other types
  Maximum temperature on the bars 70°C, Storage temperature -40°C ÷ +80°C, Relative humidity 80%

- During the installation make sure of the exact input dirction (P1 - K) and output (P2 - L) of the primary cable.
- In the case of the types with primary and secondary cables on terminals, do not invert the connection of the primary cable with the secondary one.
- If is necessary to disconnect the measuring instruments from the CT while operating it is necessary to make a short circuit between the two terminals of the secondary on the CT.
- It is recommended to ground the CTs

ALTERNATIVE OPTIONS

- Secondary current 1A
- Transformers with class 0,2 - 0,2S - 0,5S
- Other ratios and/or performances
- Internal or calibration certifications
- Tropicalisation

HOW THE DIAMETER OF A CABLE IS CALCULATED

In order to calculate the diameter of a 95 mm², it is necessary to refer to the following formule:
Section = r x r x 3,14 that is r^2 x 3,14 from which r = √ section / 3,14 r = √ 95 / 3,14 = √ 30,25 = 5,5 mm and therefore the radius is 5,5 mm
Diameter = r + r and therefore Diameter 5,5 + 5,5 mm = 11 mm
(diameter of the only leg to which is added the diameter of the insulating material, Ø total diameter of about 20 mm)

- By looping the cable through the current tranformers, the primary current is halved, without effecting the performance or class. EXAMPLE :

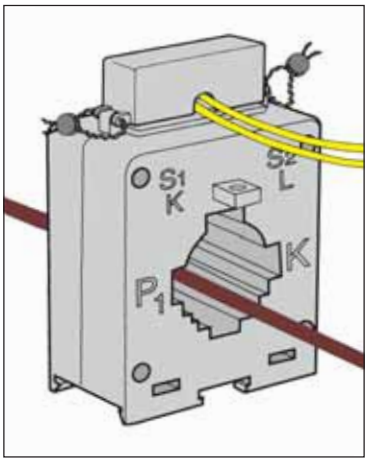

TAR 4D **200/5A** normal

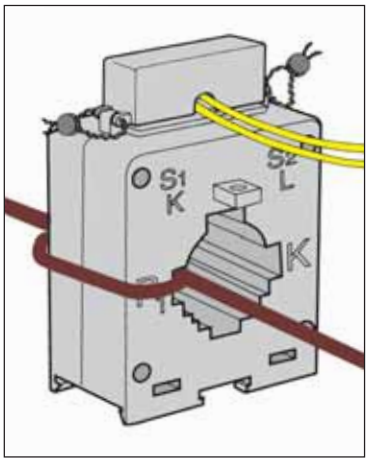

becomes **100/5A** with 2 loops

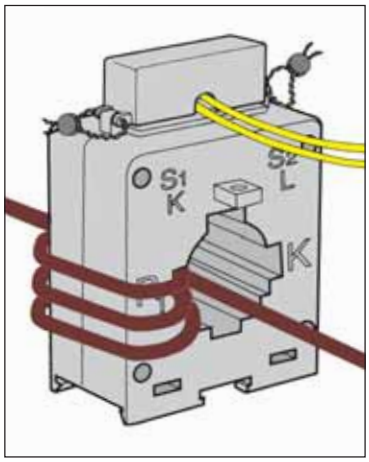

becomes **50/5A** with 4 loops

SISTEMI DI FISSAGGIO - SERIE NANO

SU BARRA DIN

A PARETE

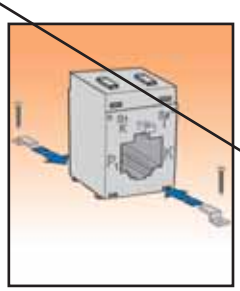

SU CAVO O BARRA PRIMARIA

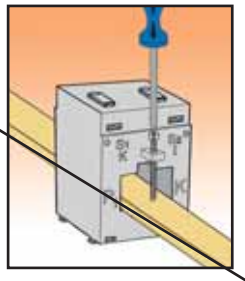

FIXING SYSTEM - MINI SERIES

ON DIN RAIL

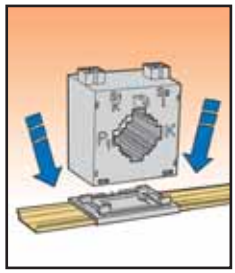

BASE MOUNTED WITH FEET

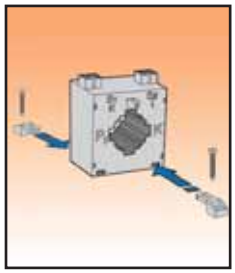

TO CABLE OR BUS BAR

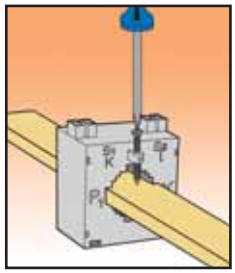

FIXING SYSTEM - SMALL SERIES

ON DIN RAIL

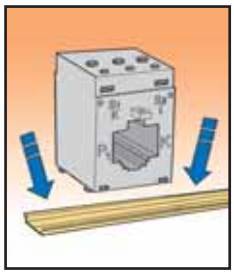

BASE MOUNTED WITH FEET

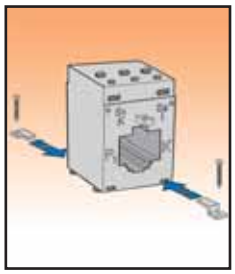

TO CABLE OR BUS BAR

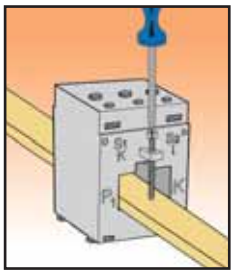

FIXING SYSTEM - STANDARD SERIES

ON DIN RAIL

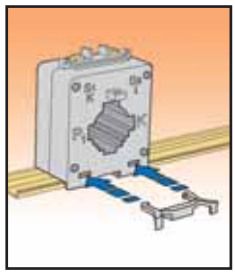

BASE MOUNTED WITH FEET

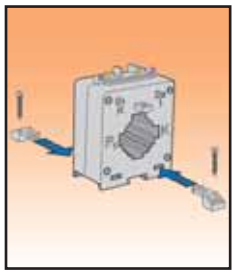

TO CABLE OR BUS BAR

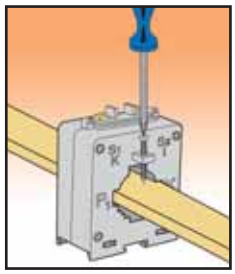

CONNECTION DIAGRAM - NANO SERIES

WITH METAL POINT CABLE TERMINAL

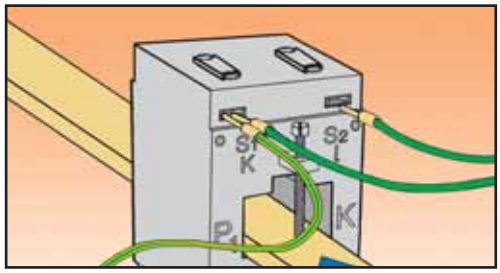

CONNECTION DIAGRAM - MINI SERIES

WITH FAST-ON (6,3 mm)

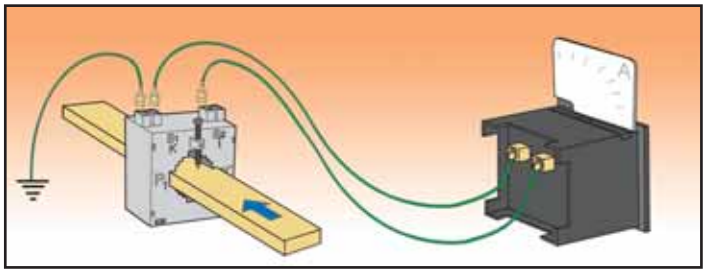

CONNECTION DIAGRAMS - SMALL SERIES

WITH METAL POINT CABLE TERMINAL

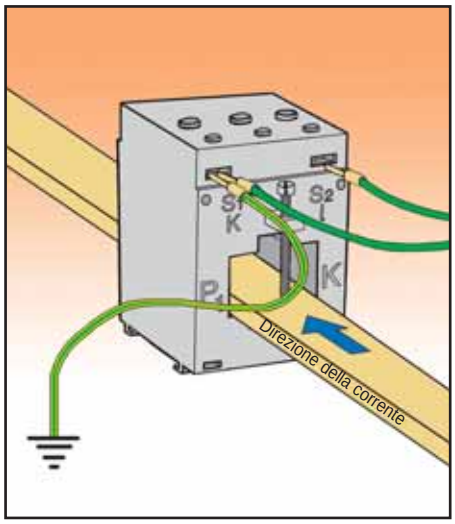

METAL FORK CABLE TERMINAL

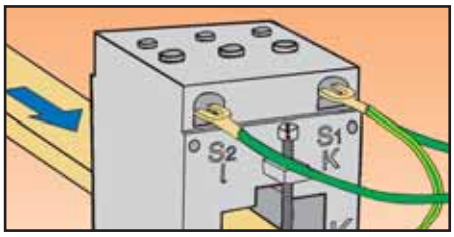

WITH FAST-ON (6,3 mm)

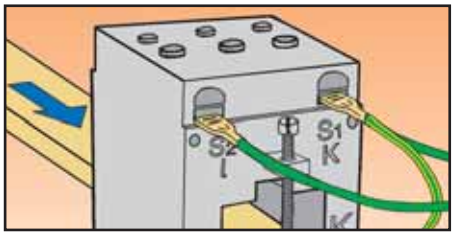

FIXING OF TERMINALS COVER AND LEAD SEAL

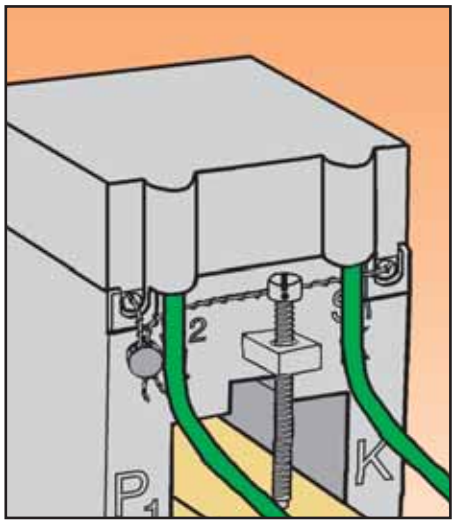

CONNECTION DIAGRAMS - STANDARD SERIES

WITH METAL FORK CABLE TERMINAL

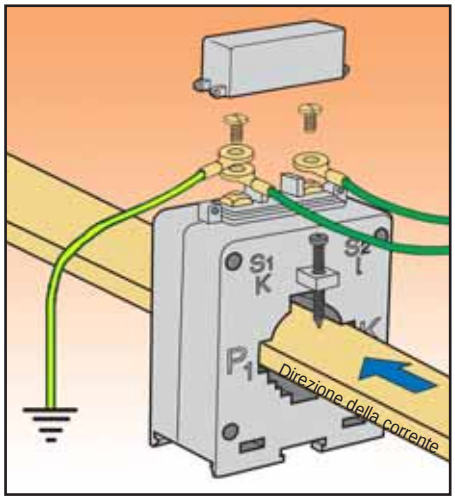

WITH FAST-ON (6,3 mm)

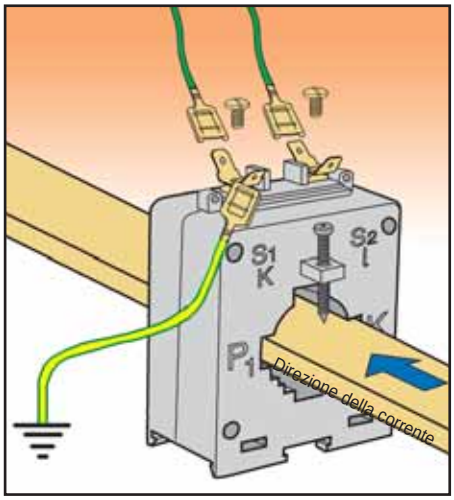

FIXING OF TERMINALS COVER AND LEAD SEAL

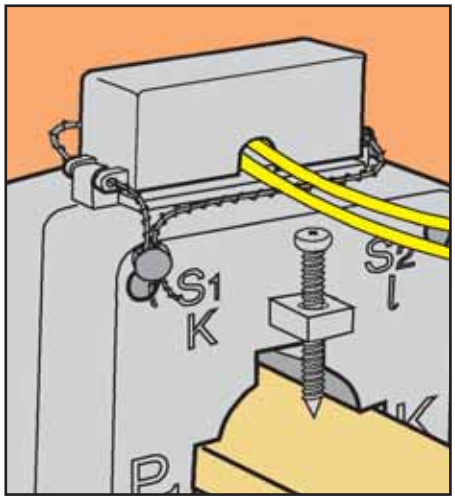

CURRENT TRANSFORMERS RANGE NANO SERIES - STANDARD CLASSES

	THREE PHASE		SINGLE PHASE																			
TYPE	**TCSN20T**	**TCSN35T**	**TCSNPD**	**TCSN22D**	**TCSN320D**	**TCSN3D**	**TCSN4D**	**TCSN4D3**	**TCSN5**	**TCSN535**	**TCSN5D4**	**TCSN6**	**TCSN645**	**TCSN8**	**TCSN10**	**TCSN1080**	**TCSN12**	**TCSN8V**	**TCSN10V2**	**TCSN10V3**	**TCSN12V**
EXECUTION	Wound primary	Wound primary	primario avvolto	Wound primary	Wound primary	Wound primary	Wound primary	Wound primary	Wound primary	Wound primary	Wound primary	Wound primary	Wound primary	Wound primary	Wound primary	Wound primary	Wound primary	Wound primary	Wound primary	Wound primary	Wound primary
CENTRAL SECTION – HORIZ. BAR		3 x (35x10)	15x3 included			30x10	40x10 30x10	30x10	50x20 40x20		40x20	60x20 50x20		80x30 60x30	100x40 80x40		125x50 100x50 80x50				
CENTRAL SECTION – CABLE	3 x (20 mm)	3 x (30 mm)		20 mm	20 mm					35 mm			50 mm			80 mm					
CENTRAL SECTION – VERTICAL BAR		3 x (10x30)																30x80	20x100	30x100	35x125
Primary Current (A)	Power (VA)	Power (VA)	Power (VA)	Power (VA)	Power (VA)	Power (VA)	Power (VA)	Power (VA)	Power (VA)	Power (VA)	Power (VA)	Power (VA)	Power (VA)	Power (VA)	Power (VA)	Power (VA)	Power (VA)	Power (VA)	Power (VA)	Power (VA)	Power (VA)
	Class 0,5 / 1 / 3	Class 0,5	Class 0,5	Class 0,5 / 1 / 3	Class 0,5 / 1 / 3	Class 0,5 / 1	Class 0,5 / 1	Class 0,5 / 1	Class 0,5	Class 0,5	Class 0,5 / 1	Class 0,5	Class 0,5	Class 0,5	Class 0,5	Class 0,5	Class 0,5	Class 0,5	Class 0,5	Class 0,5	Class 0,5
1			3																		
5			3																		
10			3																		
15			3																		
20			3																		
25			3																		
30			3																		
40			3	1,2	2			1,5													
50			3	1	1,5	2		2													
60	1		3	1	1,5	2		3													
75	1		3	1	1,5	2		4													
80	1		3	1,5	2	2		4													
100	1,5		3	2	3	2,5		3													
125	1,5		3	3	3	3		3													
150	2		3	2,5	3	3	3	5													
200	2		3	4	3	3	2,5	6	2,5		8										
250	3			5	5	5	2,5	10	3		6										
300		3		5	5	5	2,5	10	4	6	8							10			
400		4				6	2,5	10	6	6	10	6	15	6				10			
500		5				6	6	10	10	10	15	6	20	6	10	10	10	10	6	6	
600		6				6	6	10	10	10	15	10	20	10	10	10	10	10	6	6	
750							6		10	10	15	10	20	10	10	10	10	10	8	8	10
800							6		10	10	15	10	20	10	10	10	15	10	8	8	10
1000							6		10	10	15	10	20	10	10	10	20	10	10	10	10
1200									10	10	15	15	20	15	15	15	20	10	10	10	10
1250									10	10	15	20	20	20	20	20	20	10	10	10	10
1500									20	20	30	20	40	20	20	20	20	10	10	10	12
1600												20	40	20	20	20	20	10	10	10	12
2000												20	40	20	20	20	30	20	15	15	15
2500												20		20	20	20	40	20	20	20	20
3000														20	20	20	40		20	20	20
4000															30	30	50			20	20
Dimensions – Height	61,5	80	75	67	75	75	75	75	90	90	90	105	105	115	160	160	185	145	165	165	190
Dimensions – Width	105	146	60	43	49	49	60	60	70	70	70	85	85	105	140	140	175	102	95	95	107
Dimensions – Depth	50	50	43	43	43	43	43	43	43	43	43	43	43	43	60	60	63	63	50	50	63
interaxis min.	31,32	45		22	25	25	30	30	35	35	35	42	42	52	70	70					

CURRENT TRANSFORMERS RANGE NANO SERIES - SPECIAL CLASSES

	THREE PHASE						SINGLE PHASE																																																			
TYPE	**TCSN20T**			**TCSN35T**			**TCSNPD**			**TCSN22D**			**TCSN320D**			**TCSN3D**			**TCSN4D**			**TCSN4D3**			**TCSN5**			**TCSN535**			**TCSN5D4**			**TCSN6**			**TCSN645**			**TCSN8**			**TCSN10**			**TCSN1080**			**TCSN12**			**TCSN8V**			**TCSN10V2**			**TCSN10V3**			**TCSN12V**		
EXECUTION	Wound primary			Wound primary			primario avvolto			Wound primary			Wound primary			Wound primary			Wound primary			Wound primary			Wound primary			Wound primary			Wound primary			Wound primary			Wound primary			Wound primary			Wound primary			Wound primary			Wound primary			Wound primary			Wound primary			Wound primary			Wound primary		
CENTRAL SECTION HORIZ. BAR				3 x (35x10)			15x3 included									30x10			40x10 30x10			30x10			50x20 40x20						40x20			60x20 50x20						80x30 60x30			100x40 80x40						125x50 100x50 80x50														
○ CABLE	3 x (20 mm)			3 x (30 mm)						20 mm			20 mm															35 mm									50 mm									80 mm																	
VERTICAL BAR				3 x (10x30)																																																30x80			20x100			30x100			35x125		
Primary Current (A)	Power (VA)			Power (VA)			Power (VA)			Power (VA)			Power (VA)			Power (VA)			Power (VA)			Power (VA)			Power (VA)			Power (VA)			Power (VA)			Power (VA)			Power (VA)			Power (VA)			Power (VA)			Power (VA)			Power (VA)			Power (VA)			Power (VA)			Power (VA)			Power (VA)		
	Class			Class			Class			Class			Class			Class			Class			Class			Class			Class			Class			Class			Class			Class			Class			Class			Class			Class			Class			Class			Class		
	0,5s	0,2s	0,2	0,5s	0,2s	0,2	0,5s	0,2s	0,2	0,5s	0,2s	0,2	0,5s	0,2s	0,2	0,5s	0,2s	0,2	0,5s	0,2s	0,2	0,5s	0,2s	0,2	0,5s	0,2s	0,2	0,5s	0,2s	0,2	0,5s	0,2s	0,2	0,5s	0,2s	0,2	0,5s	0,2s	0,2	0,5s	0,2s	0,2	0,5s	0,2s	0,2	0,5s	0,2s	0,2	0,5s	0,2s	0,2	0,5s	0,2s	0,2	0,5s	0,2s	0,2	0,5s	0,2s	0,2	0,5s	0,2s	0,2
1																																																															
5																																																															
10																																																															
15																																																															
20																																																															
25																																																															
30																																																															
40																																																															
50																																																															
60																																																															
75																																																															
80																																																															
100																																																															
125																																																															
150																																																															
200																																																															
250																																																															
300																																																															
400																																																															
500																																																															
600																																																															
750																																																															
800																																																															
1000																																																															
1200																																																															
1250																																																															
1500																																																															
1600																																																															
2000																																																															
2500																																																															
3000																																																															
4000																																																															
Dimensions Height	61,5			80			75			67			75			75			75			75			90			90			90			105			105			115			160			160			185			145			165			165			190		
Width	105			146			60			43			49			49			60			60			70			70			70			85			85			105			140			140			175			102			95			95			107		
Depth	50			50			43			43			43			43			43			43			43			43			43			43			43			43			60			60			63			63			50			50			63		
interaxis min.	31,32			45						22			25			25			30			30			35			35			35			42			42			52			70			70																	

CURRENT TRANSFORMERS RANGE - MINI SERIES

TYPE		TAM 1D			TAM 3D		TAM 4D		TAM 5D		TAM 6
EXECUTION		Passing primary									
CENTRAL SECTION	HORIZ. BAR				20 x 12 25 x 15 30 x 10		25 x 25 30 x 20 40 x 10		50 x 12		50x23 63x20
	CABLE	21			23		30				2 x 22
	VERTICAL BAR						25 x 25 30 x 20 40 x 10				
Primary Current (A)		Power (VA)			Power (VA)		Power (VA)		Power (VA)		Power (VA)
		Class 0,5	1	3	Class 0,5	1	Class 0,5	1	Class 0,5	1	Class 0,5
40				1,3							
50				1,5							
60				1,5							
75				1,5							
80				2							
100			2			1,5		3			
120			3			1,5		3			
125			3			1,5		3			
150			4			3		3			
200		3				3		4			
250		3			2			6		3	
300					2		6		4		5
400					3		10		4		6
500							10		6		6
600							10		6		6
800									10		10
1000									10		10
1200											15
1250											15
1500											20
2000											20
Dimensions	Height	65			65		81,5		81,5		106
	Width	52			52		70		70		101
	Depth	27			27		44		44		44
interaxis min.											

CURRENT TRANSFORMERS RANGE - SMALL SERIES

STANDARD CLASSES

TYPE	TCS 08	TCS 012	TCS M15	TCS 13	TCS 16	TCS 18	TCS 25	TCS 26	TCS 32	TCS 33	TCS 64	TCS 647	TCS 126	TCS 200	TCS 65V	TCS 126V	TCS 166V
EXECUTION	Bolt M8	Bolt M12	2 DIN MODULES	Passing primary													
CENTRAL SECTION – HORIZ. BAR					15 x 5			min 25x5 max 25x6,5		min 29x5 max 2x32x5	min 30x5 max 2x63x5	min 30x30 max 3x50x5	min 120x10 max 3x120x10	min 120x10 max 3x120x10			
CENTRAL SECTION – CABLE			15	13	11	18	25		32								
CENTRAL SECTION – VERTICAL BAR								15 x 5 20 x 5		32 x 5	50x5 2x50x5 2x50x10 3x50x5	40 x 5 2 x 40 x 5 2 x 40 x 10 3 x 40 x 5	min 100x10 ÷ max 3x100x10	min 200x10 ÷ max 3x200x10	min 2x63x5 ÷ max 3x63x5	min 2x80x5 ÷ max 2x125x10	min 2x80x5 ÷ max 2x160x10
Primary Current (A)	Power (VA)	Power (VA)	Power (VA)	Power (VA)	Power (VA)	Power (VA)	Power (VA)	Power (VA)	Power (VA)	Power (VA)	Power (VA)	Power (VA)	Power (VA)	Power (VA)	Power (VA)	Power (VA)	Power (VA)
	Class 1 / 3	Class 0,5	Class 1 / 3	Class 1 / 3	Class 1 / 3	Class 0,5 / 1 / 3	Class 0,5 / 1 / 3	Class 0,5 / 1	Class 0,5 / 1	Class 0,5 / 1	Class 0,5 / 1	Class 0,5 / 1	Class 0,5	Class 0,5	Class 0,5	Class 0,5	Class 0,5
40	3		2	2		1,5	1,5										
50	4		2	2		3	3										
60	5		3	3	3	3	3										
75	5		3	3	3	3	3										
80	5		3	3	3	5	5										
100	5		3	3	3	2,5	2,5	3	3	1,5							
120	5		5	5	5	3	3	5	3	1,5							
125	5		5	5	5	3	3	5	3	1,5							
150	5		5	5	5	3,5	3,5	5	3	2							
200		5				5	5	5	5	3	2	5			1		
250		10				5	6	5	5	3,75	5	5			1		
300		10				5	6	5	5	3,5	5	5			3		
400		10					10		6	3,5	5	5			5	5	
500		10							10	5	10	7,5			10	10	
600		10							10	5	10	7,5			10	10	
800											10	10			10	10	
1000											15	15	10	10	15	15	
1200											15	15	10	15	15	15	
1250											15	15	10	15	15	15	20
1500												15	15	15		20	20
2000													15	20		20	20
2500													15	30		20	20
3000														30			20
4000														30			30
5000														30			30
6000														30			
Dimensions – Height	90,5	90,5	85	58	58	90,5	90,5	72	90,5	90,5	116	116	207	290	119	200	237
Dimensions – Width	56	56	35,5	34,5	34,5	56	56	44	56	56	87	87	172	272	70	130	130
Dimensions – Depth	53,3	53,3	58	53,3	53,3	53,3	53,3	53,3	53,3	53,3	53,3	53,3	49	49	53,3	49	50
interaxis min.			35	27	27	45	45	35	45	45 - 35	70 - 50	70 - 50			45	75	75

SPECIAL CLASSES

TYPE	TCS 18			TCS 647			TCS 126			TCS 200		
EXECUTION	Passing primary											
CENTRAL SECTION – HORIZ. BAR				min 30x30 max 3x50x5			min 120x10 max 3x120x10			min 120x10 max 3x120x10		
CENTRAL SECTION – CABLE	18											
CENTRAL SECTION – VERTICAL BAR				40 x 5 2 x 40 x 5 2 x 40 x 10 3 x 40 x 5			min 100x10 ÷ max 3x100x10			min 200x10 ÷ max 3x200x10		
Primary Current (A)	Power (VA)			Power (VA)			Power (VA)			Power (VA)		
	Class 0,2S	Class 0,2	Class 0,5S	Class 0,2S	Class 0,2	Class 0,5S	Class 0,2S	Class 0,2	Class 0,5S	Class 0,2S	Class 0,2	Class 0,5S
40												
50												
60												
75												
80												
100	1,5	1,5	2,5									
120	1,5	1,5	2,5									
125	1,5	1,5	2,5									
150	1,5	1,5	3,5									
200	1,5	1,5	5									
250	1,5	1,5	5									
300	1,5	1,5	7,5									
400												
500												
600				3	3	10						
800				3	3	10						
1000				3	4	15	3	5	10			
1200				4	5	15	4	6	10			
1250				4	5	15	4	6	10			
1500				4	5	15	5	8	15	3	10	10
2000										5	15	15
2500										10	20	20
3000										15	30	30
4000										20	40	40
Dimensions – Height	90,5			116			207			290		
Dimensions – Width	56			87			172			272		
Dimensions – Depth	53,3			53,3			49			49		
interaxis min.	45			70 - 50								

CURRENT TRANSFORMERS RANGE - STANDARD SERIES

STANDARD CLASSES

TYPE		TAR PD E1	TAR PD E2	TAR PD 1	TAR PD 2	TAR 0			TAR 1D			TAR 3D			TAR 4D		TAR 4D3	TAR 5		TAR 6	TAR 8	TAR 12	TAR 8V	TAR 12V
EXECUTION		Wound primary	Wound primary	Wound primary	Wound primary	Passing primary																		
CENTRAL SECTION	HORIZ. BAR		15 x 3 included		25x3 25x5 included	20 x 3						20 x 10 30 x 10			25x20 30x25 40x10		30x10	30x30 40x25 - 50x20		50x20 60x20	60x30 80x30	80x50 100x50 125x50		
	CABLE					15			20			21			32		25	30		50	2 x 30	2 x 50	2 x 35	3 x 35
	VERTICAL BAR											20 x 10			20 x 25 30 x 20 40 x 10		30x10	30 x 10					min 80x30 ÷ max 3x80x5	min 100x10 ÷ max 4x125x5
Primary Current (A)		Power (VA)	Power (VA)	Power (VA)	Power (VA)	Power (VA)			Power (VA)			Power (VA)			Power (VA)		Power (VA)	Power (VA)		Power (VA)	Power (VA)	Power (VA)	Power (VA)	Power (VA)
		Class 1	Class 1	Class 0,5	Class 0,5	Class 0,5	1	3	Class 0,5	1	3	Class 0,5	1	3	Class 0,5	1	Class 0,5	Class 0,5	1	Class 0,5	Class 0,5	Class 0,5	Class 0,5	Class 0,5
1		3		6																				
5		3		6																				
10		3		6																				
15		3		6																				
20		3		6																				
25		3		6																				
30		3		6																				
40		3		6				2			2													
50			3		6			2			3			2										
60			3		6			3			3			2										
80			3		6			3			3			3										
100			3		6		3			3			2,5				3							
125			3		6	3			3			2,5					3							
150			3		6	3			3			3				3	5							
200					6	3			3			3				4	6		4					
250					6	5			5			5				6	10	3						
300					6							5			6		10	4						
400					6							6			10		10	6		6	6		6	
500					6							6			10		10	10		6	10	10	10	
600												6			10		10	10		10	10	10	10	
750															10			10		10	10	10	10	
800															10			10		10	10	15	10	10
1000																		10		10	10	20	10	10
1200																		10		15	15	20	10	10
1500																		20		20	20	20	10	12
1600																				20	20	20	10	12
2000																				20	20	30	20	15
2500																				20	20	40	20	20
3000																					20	40		
4000																						50		
Dimensions	Height	75	75	75	75	67			75			75			87		87	100		110	120	175	119	165
	Width	58	58	58	58	55			58			58			75		75	85		105	125	180	109	109
	Depth	44	44	44	44	35			44			44			44		44	45		61	61,5	68,5	41	41

SPECIAL CLASSES

TYPE		TAR 3D	TAR 4D			TAR 4D3			TAR 5			TAR 6			TAR 8			TAR 12		
EXECUTION		Passing primary																		
CENTRAL SECTION	HORIZ. BAR	20x10 30x10	25x20 30x25 40x10			30x10			30x30 40x25 - 50x20			50x20 60x20			60x30 80x30			80x50 100x50 125x50		
	CAVO	21	32			25			30			50			2 x 30			2 x 50		
	VERTICAL BAR	20x10	20 x 25 30 x 20 40 x 10			30 x 10			30 x 10											
Primary Current (A)		Power (VA)	Power (VA)			Power (VA)			Power (VA)			Power (VA)			Power (VA)			Power (VA)		
		Class 0,5S	Class 0,2S	0,2	0,5S	Class 0,2S	0,2	0,5S	Class 0,2S	0,2	0,5S	Class 0,2S	0,2	0,5S	Class 0,2S	0,2	0,5S	Class 0,2S	0,2	0,5S
80																				
100						1,5	1,5	2,5												
125						1,5	1,5	2,5												
150		1,5	-	-	1	1,5	1,5	3,5												
200		2	1,5	1,5	1,5	1,5	1,5	5												
250		2	2	2	2	1,5	1,5	5	2	2	2									
300		1,5	2	2	2	1,5	1,5	7,5	2	2	2									
400		1,5	3	3	3	1,5	1,5	10	3	3	3									
500		1,5	3	3	3				3	3	3									
600		2	3	4	4				3	4	4	4	5	6						
750			4	4	5				3	4	4	4	5	6						
800			4	4	5				4	4	5	4	5	6						
1000									5	5	5	5	5	6	5	5	6			
1200									6	6	6	5	5	6	5	5	6			
1500									6	6	6	5	5	6	5	5	6	10	10	20
1600												5	5	6	10	10	15	10	10	25
2000															10	10	15	15	15	30
2500															10	10	15	20	20	35
3000															10	10	15	20	20	40
4000																		30	30	50
Dimensions	Height	75	87			87			100			110			120			175		
	Width	58	75			75			85			105			125			180		
	Depth	44	44			44			45			61			61,5			68,5		

ACCESSORIES

FOR ALL MODELS

ACERT-U — CERTIFICATIONS

- Revalco is able to supply the certification of the measuring groups in case the Customs Technical Department requests it. The certification of the whole plant is to be requested at the competent UTF offices of the area.
- In case of a measuring group with three systems composed of 3 current transformers and one meter, 5 inspection certificates are necessary. When the measuring group to be inspected is a 2 system, 4 certificates are requested as the interested CT are only two.

FOR SMALL SERIES

ATCS1C / ATCS2C — SEALABLE TERMINALS COVER

- **ATCS1C**: Sealable terminals cover for TCS13, TCS16, TCS26, TCS126, TCS200, TCS126V, TCS166V
- **ATCS2C**: Sealable terminals cover for TCS08, TCS012, TCS18, TCS25, TCS32, TCS33, TCS64, TCS647, TCS65V

ACCESSORIES FOR NANO SERIES

ATCS3C — SEALABLE TERMINALS COVER

- Transparent sealable terminals cover (min. 5 pieces)

ASCT — ELECTRONIC PROTECTION (PATENTED)

S.C.T. SECURITY CURRENT TRANSFORMER

- Electronic circuit for automatic protection against dangers caused by the deconnections of secondary terminals of current transformers (open circuit). It automatically makes a short circuit on the secondary winding in case of accidental loss of load. Residual current on terminals remains lower than 25V RMS (safety limit valid on all uses - PELV SELV FELV).
- In standard use, if nominal voltage is not higher than 25V in AC and 60V in DC, the system grants the double protection against direct and indirect contacts.
- The intervention is instantaneous and the voltage on the secondary terminals of current transformers in limited up to 25V RMS; when the normal working conditions will be restored the electronic circuit stops its action and its influence to the current transformers stops also. Completely static it is composed by few essential components assuring long time duration.
- Standards: IEC60364; IEC473.1.4; IEC556.3 / CEI64-8-4; CEI411.1.4.3; CEI411.5.2 - CEI411.2 - CEI473.1.4 - CEI473.2.3
- Characteristics:
  - reduced installation costs
  - possibility to take out the connected device without precautions or safety risks
  - the electronic circuit is self supplied by the secondary terminals in case of load loss only
  - in standard and nominal working conditions the device doesn't influence the correct function of current transformers
- Applications:
  - where it is necessary to encrease the safety coefficient
  - mines and quarries
  - military use
  - modular boards with high safety level
  - places with fire risk, explosion risk, high humidity level, hospitals
  - naval use
  - electrical situation on which not qualified people is present
  - low or extremely low voltage applications

ACOR... / AECOR... — AMMETER TRANSDUCERS

- With output signal selection minidip 1-5-10V and 5-10-20-4/20mA
- Class 0,5 (total class is made by the sum of the CT and accessory classes)

Preliminary range
Contact REVALCO for delivery time information

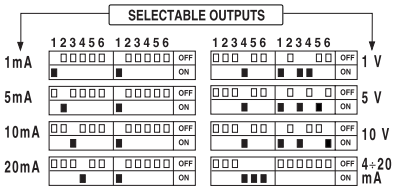

		ACOR5230	ACOR1230	AECOR20	AECOR10
Input 5A AC, standard power supply 230VAC	230	•			
Input 1A AC, standard power supply 230VAC	230		•		
Power supply 24VAC	24	•	•		
Power supply 110VAC	110	•	•		
Sole power supply 22...36VAC and 19...70VDC	-P1	•	•		
Sole power supply 44...130VAC and 70...240VDC	-P2	•	•		
Input 5A AC, output 20mA DC, self-suppplied version				•	
Input 5A AC, output 10V DC, self-suppplied version					•

ACCESSORIES FOR SPLITE CORE SERIES (only TCSA...)

SEALABLE SCREW COVER PLATE

- Accessory on NOT use site

- In case of necessity take out the accessories

- Put the accessories on the upper sides and seal them if necessary

CURRENT TRANSFORMERS - NANO SERIES

- Fixing system: to wall or to DIN rail by an accessory; directly to cable by screws
- Different characteristics on request
- **Secondary current 1A on request**
- Sealable terminal covers on request
- The double terminal entry allows short circuit links to be fitted when it is necessary to disconnect the measuring instrument from the transformer without damage to the CT, or for easier termination to ground of the CT

Preliminary range. Contact REVALCO for delivery time information

THREE PHASE

TCSN20T

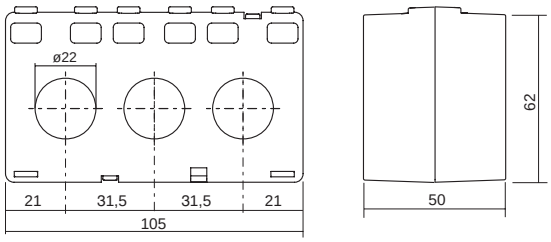

- Primary passing transformer, 3 wires 20mm each

A	kg	class 0,5		class 1		class 3	
primary current	weigth	secondary current 5A		secondary current 5A		secondary current 5A	
		code	VA	code	VA	code	VA
60						TCSN20T 60A	1
75						TCSN20T 75A	1
80						TCSN20T 80A	1
100						TCSN20T 100A	1,5
120						TCSN20T 120A	1,5

A	kg	class 0,5		class 1		class 3	
primary current	weigth	secondary current 5A		secondary current 5A		secondary current 5A	
		code	VA	code	VA	code	VA
125						TCSN20T 125A	1,5
150				TCSN20T 150A	2		
200		TCSN20T 200A	2				
250		TCSN20T 250A	3				

TCSN35T

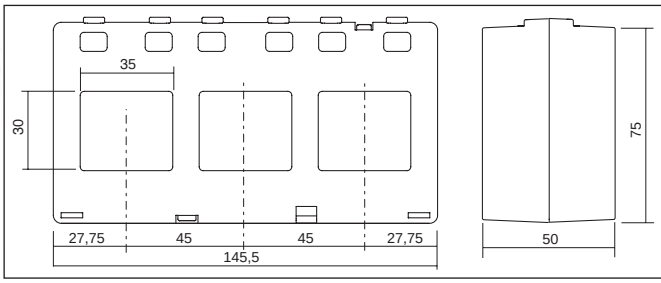

- Primary passing transformer, 3 wires 30mm each or 3 bars 35x10 mm

A	kg	class 0,5		class 1		class 3	
primary current	weigth	secondary current 5A		secondary current 5A		secondary current 5A	
		code	VA	code	VA	code	VA
300		TCSN35T 300A	3				
400		TCSN35T 400A	4				

A	kg	class 0,5		class 1		class 3	
primary current	weigth	secondary current 5A		secondary current 5A		secondary current 5A	
		code	VA	code	VA	code	VA
500		TCSN35T 500A	5				
600		TCSN35T 600A	6				

Preliminary range. Contact REVALCO for delivery time information

SINGLE PHASE

TCSNPD2

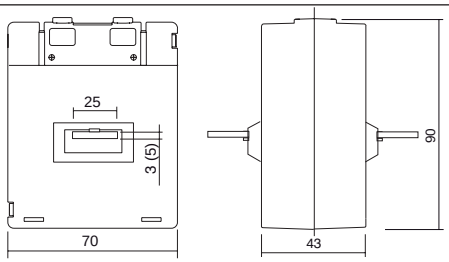

- Primary winding transformer. Primary current by incorporated central bar 25x3 mm up to 300A, 25x5 mm; from 400 to 500A
secondary current on terminals

A	kg	class 0,5		class 1		class 3	
primary current	weigth	secondary current 5A		secondary current 5A		secondary current 5A	
		code	VA	code	VA	code	VA
50	0,5	TCSNPD2 50A	6				
60		TCSNPD2 60A	6				
80		TCSNPD2 80A	6				
100		TCSNPD2 100A	6				
125		TCSNPD2 125A	6				
150		TCSNPD2 150A	6				

A	kg	class 0,5		class 1		class 3	
primary current	weigth	secondary current 5A		secondary current 5A		secondary current 5A	
		code	VA	code	VA	code	VA
200	0,5	TCSNPD2 200A	6				
250		TCSNPD2 250A	6				
300		TCSNPD2 300A	6				
400		TCSNPD2 400A	6				
500		TCSNPD2 500A	6				

TCSNPD

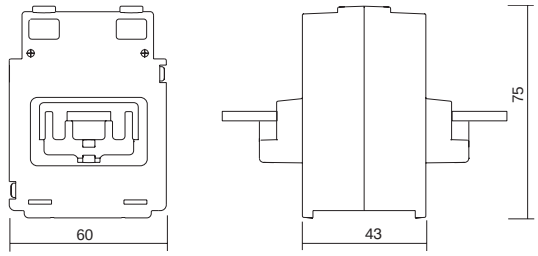

Primary winding transformer. Primary current by incorporated central bar 15x3 mm, secondary current on terminals

A	kg	class 0,5		class 1		class 3	
primary current	weigth	secondary current 5A		secondary current 5A		secondary current 5A	
		code	VA	code	VA	code	VA
1		TCSNPD 1A	3				
5		TCSNPD 5A	3				
10		TCSNPD 10A	3				
15		TCSNPD 15A	3				
20		TCSNPD 20A	3				
25		TCSNPD 25A	3				
30		TCSNPD 30A	3				
40		TCSNPD 40A	3				
50		TCSNPD 50A	3				

A	kg	class 0,5		class 1		class 3	
primary current	weigth	secondary current 5A		secondary current 5A		secondary current 5A	
		code	VA	code	VA	code	VA
60		TCSNPD 60A	3				
75		TCSNPD 75A	3				
80		TCSNPD 80A	3				
100		TCSNPD 100A	3				
120		TCSNPD 120A	3				
125		TCSNPD 125A	3				
150		TCSNPD 150A	3				
200		TCSNPD 200A	3				

TCSN22D

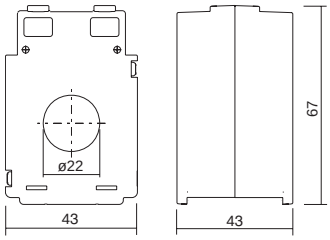

Transformer suitable for primary current by cable with maximum diameter 22 mm

A	kg	class 0,5		class 1		class 3	
primary current	weigth	secondary current 5A		secondary current 5A		secondary current 5A	
		code	VA	code	VA	code	VA
40						TCSN22D 40A	1,2
50				TCSN22D 50A	1		
60				TCSN22D 60A	1		
75				TCSN22D 75A	1		
80				TCSN22D 80A	1,5		
100				TCSN22D 100A	2		

A	kg	class 0,5		class 1		class 3	
primary current	weigth	secondary current 5A		secondary current 5A		secondary current 5A	
		code	VA	code	VA	code	VA
120				TCSN22D 120A	2		
125				TCSN22D 125A	3		
150		TCSN22D 150A	2,5				
200		TCSN22D 200A	4				
250		TCSN22D 250A	5				
300		TCSN22D 300A	5				

TCSN320D

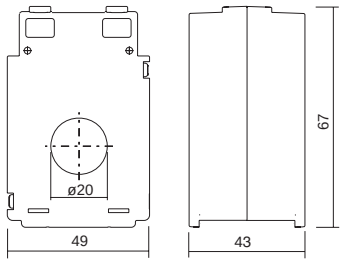

Transformer suitable for primary current by cable with maximum diameter 20 mm

A	kg	class 0,5		class 1		class 3	
primary current	weigth	secondary current 5A		secondary current 5A		secondary current 5A	
		code	VA	code	VA	code	VA
40						TCSN320D 40A	2
50				TCSN320D 50A	1,5		
60				TCSN320D 60A	1,5		
75				TCSN320D 75A	1,5		
80				TCSN320D 80A	2		

A	kg	class 0,5		class 1		class 3	
primary current	weigth	secondary current 5A		secondary current 5A		secondary current 5A	
		code	VA	code	VA	code	VA
100				TCSN320D 100A	3		
120				TCSN320D 120A	3		
125				TCSN320D 125A	3		
150		TCSN320D 150A	3				

TCSN3D

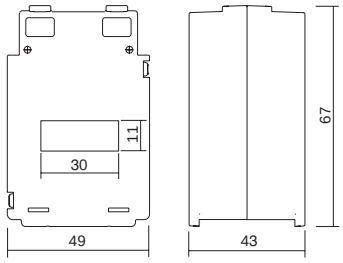

Transformer suitable for primary current by horizontal bar 30x10 mm

A	kg	class 0,5		class 1		class 3	
primary current	weigth	secondary current 5A		secondary current 5A		secondary current 5A	
		code	VA	code	VA	code	VA
50				TCSN3D 50A	2		
60				TCSN3D 60A	2		
75				TCSN3D 75A	2		
80				TCSN3D 80A	2		
100				TCSN3D 100A	2,5		
120				TCSN3D 120A	2,5		
125				TCSN3D 125A	3		

A	kg	class 0,5		class 1		class 3	
primary current	weigth	secondary current 5A		secondary current 5A		secondary current 5A	
		code	VA	code	VA	code	VA
150		TCSN3D 150A	3				
200		TCSN3D 200A	3				
250		TCSN3D 250A	5				
300		TCSN3D 300A	5				
400		TCSN3D 400A	6				
500		TCSN3D 500A	6				
600		TCSN3D 600A	6				

TCSN4D

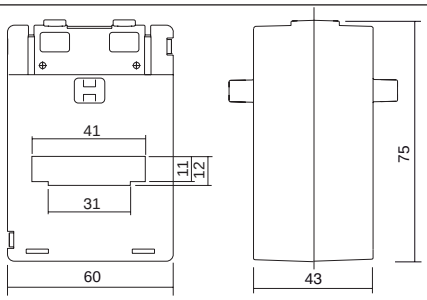

Transformer suitable for primary current by horizontal bar 30x10 and 40x10 mm

A	kg	class 0,5		class 1		class 3	
primary current	weigth	secondary current 5A		secondary current 5A		secondary current 5A	
		code	VA	code	VA	code	VA
150				TCSN4D 150A	3		
200		TCSN4D 200A	2,5				
250		TCSN4D 250A	2,5				
300		TCSN4D 300A	2,5				
400		TCSN4D 400A	2,5				

A	kg	class 0,5		class 1		class 3	
primary current	weigth	secondary current 5A		secondary current 5A		secondary current 5A	
		code	VA	code	VA	code	VA
500		TCSN4D 500A	6				
600		TCSN4D 600A	6				
750		TCSN4D 750A	6				
800		TCSN4D 800A	6				
1000		TCSN4D 1k0A	6				

TCSN4D3

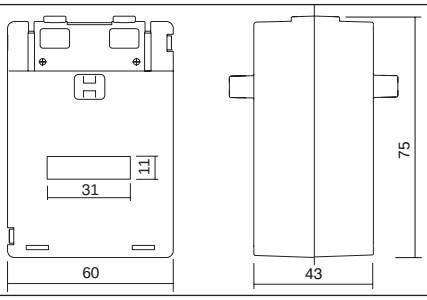

Transformer suitable for primary current by horizontal bar 30x10 mm

A	kg	class 0,5		class 1		class 3	
primary current	weigth	secondary current 5A		secondary current 5A		secondary current 5A	
		code	VA	code	VA	code	VA
40				TCSN4D3 40A	1,5		
50				TCSN4D3 50A	2		
60				TCSN4D3 60A	3		
75				TCSN4D3 75A	4		
80				TCSN4D3 80A	4		
100		TCSN4D3 100A	3				
120		TCSN4D3 120A	3				
125		TCSN4D3 125A	3				

A	kg	class 0,5		class 1		class 3	
primary current	weigth	secondary current 5A		secondary current 5A		secondary current 5A	
		code	VA	code	VA	code	VA
150		TCSN4D3 150A	5				
200		TCSN4D3 200A	6				
250		TCSN4D3 250A	10				
300		TCSN4D3 300A	10				
400		TCSN4D3 400A	10				
500		TCSN4D3 500A	10				
600		TCSN4D3 600A	10				

TCSN432

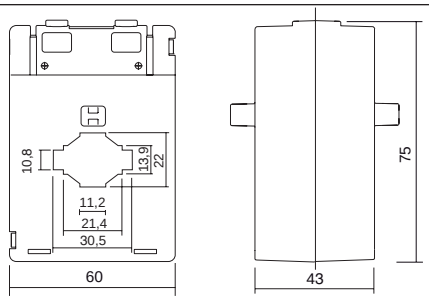

- Transformer suitable for primary current by cable with maximum diameter 21 mm or by horizontal bar 20x10 - 30x10 mm and vertical bar 20x10 mm

A	kg	class 0,5		class 1		class 3	
primary current	weigth	secondary current 5A		secondary current 5A		secondary current 5A	
		code	VA	code	VA	code	VA
50	0,3			TCSN432 100A	2,5	TCSN432 50A	2
60						TCSN432 60A	2
80						TCSN432 80A	3
100							
125		TCSN432 125A	2,5				
150		TCSN432 150A	3				

A	kg	class 0,5		class 1		class 3	
primary current	weigth	secondary current 5A		secondary current 5A		secondary current 5A	
		code	VA	code	VA	code	VA
200	0,3	TCSN432 200A	3				
250		TCSN432 250A	5				
300		TCSN432 300A	5				
400		TCSN432 400A	6				
500		TCSN432 500A	6				
600		TCSN432 600A	6				

TCSN5

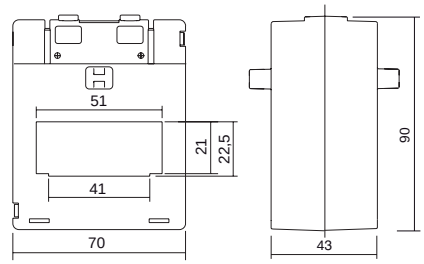

- Transformer suitable for primary current by horizontal bar 40x20 and 50x20 mm

A	kg	class 0,5		class 1		class 3	
primary current	weigth	secondary current 5A		secondary current 5A		secondary current 5A	
		code	VA	code	VA	code	VA
200		TCSN5 200A	2,5				
250		TCSN5 250A	3				
300		TCSN5 300A	4				
400		TCSN5 400A	6				
500		TCSN5 500A	10				
600		TCSN5 600A	10				

A	kg	class 0,5		class 1		class 3	
primary current	weigth	secondary current 5A		secondary current 5A		secondary current 5A	
		code	VA	code	VA	code	VA
750		TCSN5 750A	10				
800		TCSN5 800A	10				
1000		TCSN5 1k0A	10				
1200		TCSN5 1k2A	10				
1250		TCSN5 1k25A	10				
1500		TCSN5 1k5A	20				

TCSN535

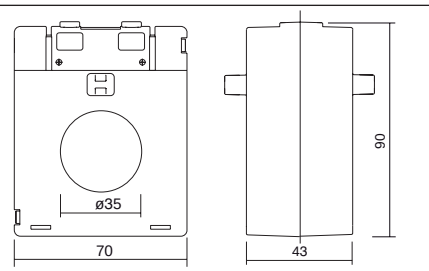

- Transformer suitable for primary current by cable with maximum diameter 35 mm

A	kg	class 0,5		class 1		class 3	
primary current	weigth	secondary current 5A		secondary current 5A		secondary current 5A	
		code	VA	code	VA	code	VA
300		TCSN535 300A	6				
400		TCSN535 400A	6				
500		TCSN535 500A	10				
600		TCSN535 600A	10				
750		TCSN535 750A	10				

A	kg	class 0,5		class 1		class 3	
primary current	weigth	secondary current 5A		secondary current 5A		secondary current 5A	
		code	VA	code	VA	code	VA
800		TCSN535 800A	10				
1000		TCSN535 1k0A	10				
1200		TCSN535 1k2A	10				
1250		TCSN535 1k25A	10				
1500		TCSN535 1k5A	20				

TCSN5D4

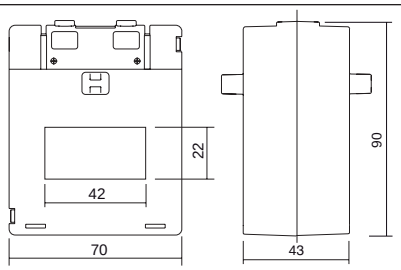

Transformer suitable for primary current by horizontal bar 40x20 mm

A	kg	class 0,5		class 1		class 3	
primary current	weigth	secondary current 5A		secondary current 5A		secondary current 5A	
		code	VA	code	VA	code	VA
200				TCSN5D4 200A	8		
250		TCSN5D4 250A	6				
300		TCSN5D4 300A	8				
400		TCSN5D4 400A	10				
500		TCSN5D4 500A	15				
600		TCSN5D4 600A	15				

A	kg	class 0,5		class 1		class 3	
primary current	weigth	secondary current 5A		secondary current 5A		secondary current 5A	
		code	VA	code	VA	code	VA
750		TCSN5D4 750A	15				
800		TCSN5D4 800A	15				
1000		TCSN5D4 1k0A	15				
1200		TCSN5D4 1k2A	15				
1250		TCSN5D4 1k25A	15				
1500		TCSN5D4 1k5A	30				

TCSN6

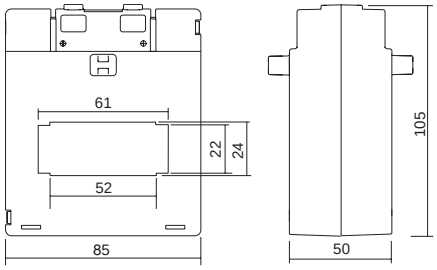

Transformer suitable for primary current by horizontal bar 50x20 and 60x20 mm

A	kg	class 0,5		class 1		class 3	
primary current	weigth	secondary current 5A		secondary current 5A		secondary current 5A	
		code	VA	code	VA	code	VA
400		TCSN6 400A	6				
500		TCSN6 500A	6				
600		TCSN6 600A	10				
750		TCSN6 750A	10				
800		TCSN6 800A	10				
1000		TCSN6 1k0A	10				

A	kg	class 0,5		class 1		class 3	
primary current	weigth	secondary current 5A		secondary current 5A		secondary current 5A	
		code	VA	code	VA	code	VA
1200		TCSN6 1k2A	15				
1250		TCSN6 1k25A	20				
1500		TCSN6 1k5A	20				
1600		TCSN6 1k6A	20				
2000		TCSN6 2k0A	20				
2500		TCSN6 2k5A	20				

TCSN622

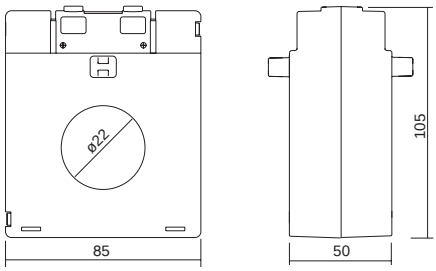

Transformer suitable for primary current by cable with maximum diameter 20 mm

A	kg	class 0,5		class 1		class 3	
primary current	weigth	secondary current 5A		secondary current 5A		secondary current 5A	
		code	VA	code	VA	code	VA
125		TCSN622 125A	5				
150		TCSN622 150A	6				
200		TCSN622 200A	10				

A	kg	class 0,5		class 1		class 3	
primary current	weigth	secondary current 5A		secondary current 5A		secondary current 5A	
		code	VA	code	VA	code	VA
250		TCSN622 250A	15				
300		TCSN622 300A	20				

TCSN645

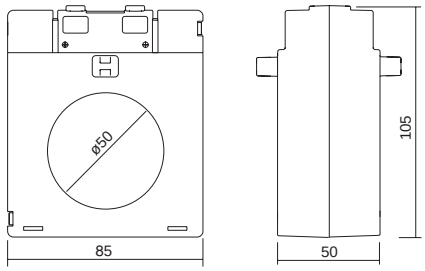

Transformer suitable for primary current by cable with maximum diameter 50 mm

A	kg	class 0,5		class 1		class 3	
primary current	weigth	secondary current 5A		secondary current 5A		secondary current 5A	
		code	VA	code	VA	code	VA
400		TCSN645 400A	15				
500		TCSN645 500A	20				
600		TCSN645 600A	20				
750		TCSN645 750A	20				
800		TCSN645 800A	20				
1000		TCSN645 1k0A	20				

A	kg	class 0,5		class 1		class 3	
primary current	weigth	secondary current 5A		secondary current 5A		secondary current 5A	
		code	VA	code	VA	code	VA
1200		TCSN645 1k2A	20				
1250		TCSN645 1k25A	20				
1500		TCSN645 1k5A	40				
1600		TCSN645 1k6A	40				
2000		TCSN645 2k0A	40				

TCSN8

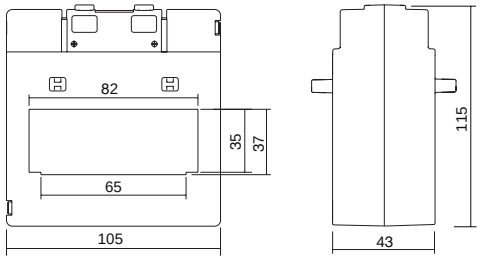

Transformer suitable for primary current by horizontal bar 60x30 and 80x30 mm

A	kg	class 0,5		class 1		class 3	
primary current	weigth	secondary current 5A		secondary current 5A		secondary current 5A	
		code	VA	code	VA	code	VA
400		TCSN8 400A	6				
500		TCSN8 500A	6				
600		TCSN8 600A	10				
750		TCSN8 750A	10				
800		TCSN8 800A	10				
1000		TCSN8 1k0A	10				
1200		TCSN8 1k2A	15				

A	kg	class 0,5		class 1		class 3	
primary current	weigth	secondary current 5A		secondary current 5A		secondary current 5A	
		code	VA	code	VA	code	VA
1250		TCSN8 1k25A	20				
1500		TCSN8 1k5A	20				
1600		TCSN8 1k6A	20				
2000		TCSN8 2k0A	20				
2500		TCSN8 2k5A	20				
3000		TCSN8 3k0A	20				

TCSN832

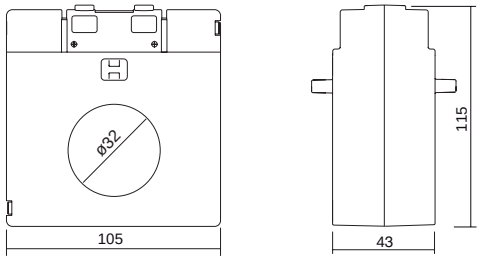

Transformer suitable for primary current by cable with maximum diameter 30 mm

A	kg	class 0,5		class 1		class 3	
primary current	weigth	secondary current 5A		secondary current 5A		secondary current 5A	
		code	VA	code	VA	code	VA
100		TCSN832 100A	5				
120		TCSN832 120A	5				
125		TCSN832 125A	5				
150		TCSN832 150A	6				

A	kg	class 0,5		class 1		class 3	
primary current	weigth	secondary current 5A		secondary current 5A		secondary current 5A	
		code	VA	code	VA	code	VA
200		TCSN832 200A	10				
250		TCSN832 250A	15				
300		TCSN832 300A	20				
400		TCSN832 400A	30				

TCSN10

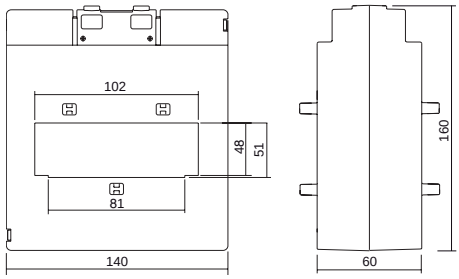

Transformer suitable for primary current by horizontal bar 80x40 and 100x40 mm

A	kg	class 0,5		class 1		class 3	
primary current	weigth	secondary current 5A		secondary current 5A		secondary current 5A	
		code	VA	code	VA	code	VA
500		TCSN10 500A	10				
600		TCSN10 600A	10				
750		TCSN10 750A	10				
800		TCSN10 800A	10				
1000		TCSN10 1k0A	10				
1200		TCSN10 1k2A	15				

A	kg	class 0,5		class 1		class 3	
primary current	weigth	secondary current 5A		secondary current 5A		secondary current 5A	
		code	VA	code	VA	code	VA
1250		TCSN10 1k25A	20				
1500		TCSN10 1k5A	20				
1600		TCSN10 1k6A	20				
2000		TCSN10 2k0A	20				
2500		TCSN10 2k5A	20				
3000		TCSN10 3k0A	20				

TCSN1080

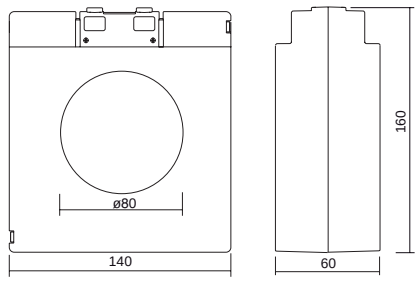

Transformer suitable for primary current by cable with maximum diameter 80 mm

A	kg	class 0,5		class 1		class 3	
primary current	weigth	secondary current 5A		secondary current 5A		secondary current 5A	
		code	VA	code	VA	code	VA
500		TCSN1080 500A	10				
600		TCSN1080 600A	10				
750		TCSN1080 750A	10				
800		TCSN1080 800A	10				
1000		TCSN1080 1k0A	10				
1200		TCSN1080 1k2A	15				

A	kg	class 0,5		class 1		class 3	
primary current	weigth	secondary current 5A		secondary current 5A		secondary current 5A	
		code	VA	code	VA	code	VA
1250		TCSN1080 1k25A	20				
1500		TCSN1080 1k5A	20				
1600		TCSN1080 1k6A	20				
2000		TCSN1080 2k0A	20				
2500		TCSN1080 2k5A	20				
3000		TCSN1080 3k0A	20				

TCSN12

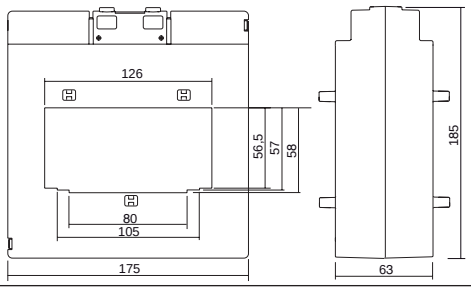

Transformer suitable for primary current by horizontal bar 80x50, 100x50 and 125x50 mm

A	kg	class 0,5		class 1		class 3	
primary current	weigth	secondary current 5A		secondary current 5A		secondary current 5A	
		code	VA	code	VA	code	VA
500		TCSN12 500A	10				
600		TCSN12 600A	10				
750		TCSN12 750A	10				
800		TCSN12 800A	15				
1000		TCSN12 1k0A	20				
1200		TCSN12 1k2A	20				
1250		TCSN12 1k25A	20				

A	kg	class 0,5		class 1		class 3	
primary current	weigth	secondary current 5A		secondary current 5A		secondary current 5A	
		code	VA	code	VA	code	VA
1500		TCSN12 1k5A	20				
1600		TCSN12 1k6A	20				
2000		TCSN12 2k0A	30				
2500		TCSN12 2k5A	40				
3000		TCSN12 3k0A	40				
4000		TCSN12 4k0A	50				

TCSN128

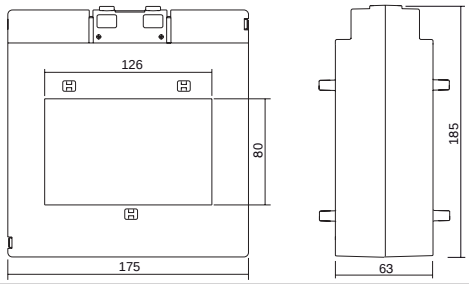

Transformer suitable for primary current by horizontal bar 125x80 mm

A primary current	kg weigth	class 0,5 secondary current 5A		class 1 secondary current 5A		class 3 secondary current 5A	
		code	VA	code	VA	code	VA
5000		TCSN128 5k0A	50				
6000		TCSN128 6k0A	50				
8000		TCSN128 8k0A	50				

A primary current	kg weigth	class 0,5 secondary current 1A		class 1 secondary current 1A		class 3 secondary current 1A	
		code	VA	code	VA	code	VA
5000		TCSN128 1 5k0A	50				
6000		TCSN128 1 6k0A	50				
8000		TCSN128 1 8k0A	50				

TCSN8V

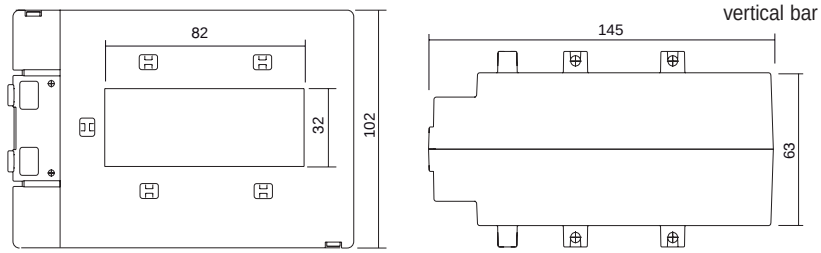

Transformer suitable for primary current by vertical bar 30x80 mm

A primary current	kg weigth	class 0,5 secondary current 5A		class 1 secondary current 5A		class 3 secondary current 5A	
		code	VA	code	VA	code	VA
400		TCSN8V 400A	10				
500		TCSN8V 500A	10				
600		TCSN8V 600A	10				
750		TCSN8V 750A	10				
800		TCSN8V 800A	10				
1000		TCSN8V 1k0A	10				

A primary current	kg weigth	class 0,5 secondary current 5A		class 1 secondary current 5A		class 3 secondary current 5A	
		code	VA	code	VA	code	VA
1200		TCSN8V 1k2A	10				
1250		TCSN8V 1k25A	10				
1500		TCSN8V 1k5A	10				
1600		TCSN8V 1k6A	10				
2000		TCSN8V 2k0A	20				
2500		TCSN8V 2k5A	20				

TCSN10V2

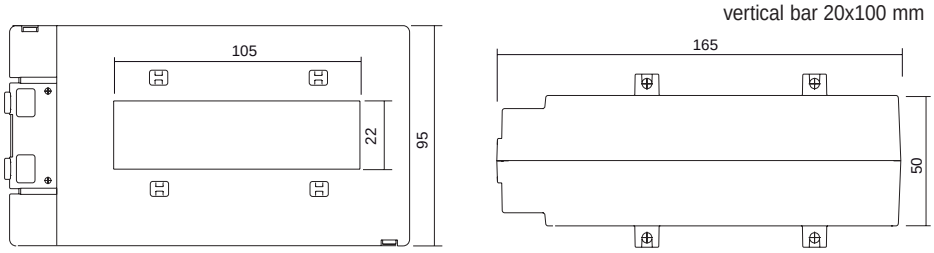

Transformer suitable for primary current by vertical bar 20x100 mm

A primary current	kg weigth	class 0,5 secondary current 5A		class 1 secondary current 5A		class 3 secondary current 5A	
		code	VA	code	VA	code	VA
500		TCSN10V2 500A	6				
600		TCSN10V2 600A	6				
750		TCSN10V2 750A	8				
800		TCSN10V2 800A	8				
1000		TCSN10V2 1k0A	10				
1200		TCSN10V21k2A	10				

A primary current	kg weigth	class 0,5 secondary current 5A		class 1 secondary current 5A		class 3 secondary current 5A	
		code	VA	code	VA	code	VA
1250		TCSN10V2 1k25A	10				
1500		TCSN10V2 1k5A	10				
1600		TCSN10V2 1k6A	10				
2000		TCSN10V2 2k0A	15				
2500		TCSN10V2 2k5A	20				
3000		TCSN10V2 3k0A	20				

TCSN10V3

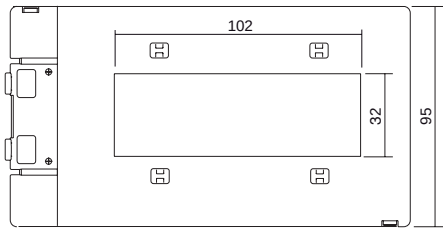

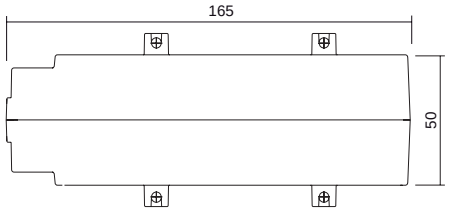

Transformer suitable for primary current by vertical bar 30x100 mm

A	kg	class 0,5		class 1		class 3	
primary current	weigth	secondary current 5A		secondary current 5A		secondary current 5A	
		code	VA	code	VA	code	VA
500		TCSN10V3 500A	6				
600		TCSN10V3 600A	6				
750		TCSN10V3 750A	8				
800		TCSN10V3 800A	8				
1000		TCSN10V3 1k0A	10				
1200		TCSN10V3 1k2A	10				
1250		TCSN10V3 1k25A	10				

A	kg	class 0,5		class 1		class 3	
primary current	weigth	secondary current 5A		secondary current 5A		secondary current 5A	
		code	VA	code	VA	code	VA
1500		TCSN10V3 1k5A	10				
1600		TCSN10V3 1k6A	10				
2000		TCSN10V3 2k0A	15				
2500		TCSN10V3 2k5A	20				
3000		TCSN10V3 3k0A	20				
4000		TCSN10V3 4k0A	20				

TCSN12V

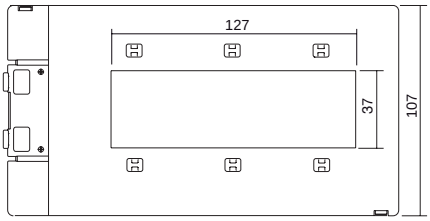

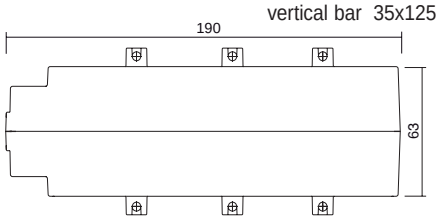

Transformer suitable for primary current by vertical bar 35x125 mm

A	kg	class 0,5		class 1		class 3	
primary current	weigth	secondary current 5A		secondary current 5A		secondary current 5A	
		code	VA	code	VA	code	VA
750		TCSN12V 750A	10				
800		TCSN12V 800A	10				
1000		TCSN12V 1k0A	10				
1200		TCSN12V 1k2A	10				
1250		TCSN12V 1k25A	10				
1500		TCSN12V 1k5A	12				

A	kg	class 0,5		class 1		class 3	
primary current	weigth	secondary current 5A		secondary current 5A		secondary current 5A	
		code	VA	code	VA	code	VA
1600		TCSN12V 1k6A	12				
2000		TCSN12V 2k0A	15				
2500		TCSN12V 2k5A	20				
3000		TCSN12V 3k0A	20				
4000		TCSN12V 4k0A	20				

MINI SERIES - CURRENT TRANSFORMERS

- The double terminal entry allows short circuit links to be fitted when it is necessary to disconnect the measuring instrument from the transformer without damage to the CT, or for easier termination to ground of the CT
- Fixing system: to wall or to DIN rail by an accessory; directly to cable by screws (the accessory and the screws are supplied together with the current transformer)
- **Secondary current 1A on request**

TAM1D

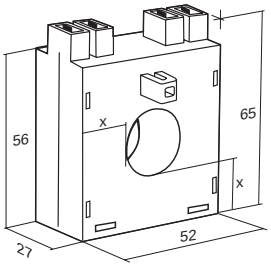

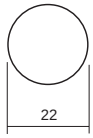

Central section

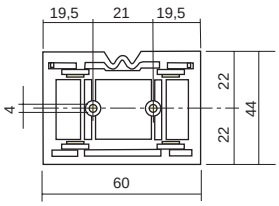

Accessory

- Transformer suitable for primary current by cable with maximum diameter 21mm

Screws M3,5x31

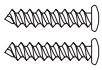

A	kg	class 0,5		class 1		class 3	
primary current	weigth	secondary current 5A		secondary current 5A		secondary current 5A	
		code	VA	code	VA	code	VA
40	0,2					TAM1D 40A	1,3
50						TAM1D 50A	1,5
60						TAM1D 60A	1,5
75						TAM1D 75A	1,5
80						TAM1D 80A	2
100				TAM1D 100A	2		

A	kg	class 0,5		class 1		class 3	
primary current	weigth	secondary current 5A		secondary current 5A		secondary current 5A	
		code	VA	code	VA	code	VA
120	0,2			TAM1D 120A	3		
125				TAM1D 125A	3		
150				TAM1D 150A	4		
200		TAM1D 200A	3				
250		TAM1D 250A	3				

TAM3D

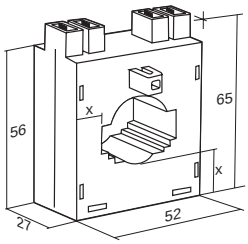

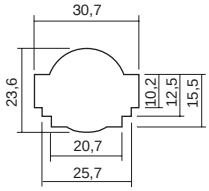

Central section

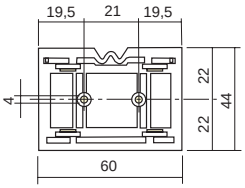

Accessory

- Transformer suitable for primary current by cable with maximum diameter 23mm or by horizontal bar 20x12, 25x15, 30x10 mm

Screws M3,5x31

A	kg	class 0,5		class 1		class 3	
primary current	weigth	secondary current 5A		secondary current 5A		secondary current 5A	
		code	VA	code	VA	code	VA
100	0,2			TAM3D 100A	1,5		
120				TAM3D 120A	1,5		
125				TAM3D 125A	1,5		
150				TAM3D 150A	3		

A	kg	class 0,5		class 1		class 3	
primary current	weigth	secondary current 5A		secondary current 5A		secondary current 5A	
		code	VA	code	VA	code	VA
200	0,2			TAM3D 200A	3		
250		TAM3D 250A	2				
300		TAM3D 300A	2				
400		TAM3D 400A	3				

TAM4D

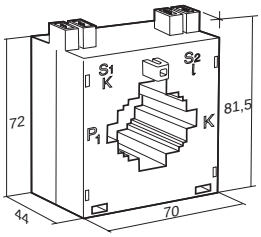

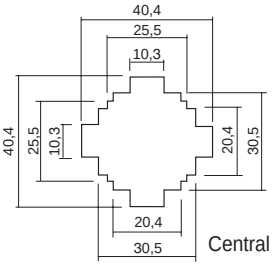

Central section

Accessory

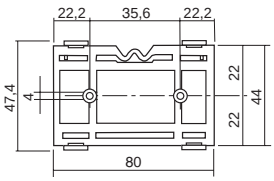

- Transformer suitable for primary current by cable with maximum diameter 30mm or horizontal/vertical bar 25x25, 30x20, 40x10 mm

Screws M3,5x38

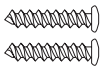

A	kg	class 0,5		class 1		class 3	
primary current	weigth	secondary current 5A		secondary current 5A		secondary current 5A	
		code	VA	code	VA	code	VA
100	0,4			TAM4D 100A	3		
120				TAM4D 120A	3		
125				TAM4D 125A	3		
150				TAM4D 150A	3		
200				TAM4D 200A	4		

A	kg	class 0,5		class 1		class 3	
primary current	weigth	secondary current 5A		secondary current 5A		secondary current 5A	
		code	VA	code	VA	code	VA
250	0,4			TAM4D 250A	6		
300		TAM4D 300A	6				
400		TAM4D 400A	10				
500	0,3	TAM4D 500A	10				
600		TAM4D 600A	10				

TAM5D

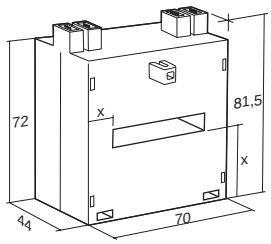

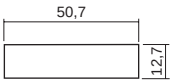

Central section

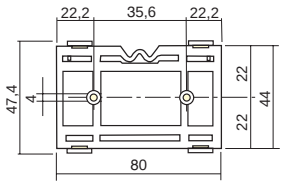

Accessory

Transformer suitable for primary current by horizontal bar 50x12 mm

Screws M3,5x38

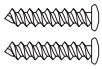

A	kg	class 0,5		class 1		class 3	
primary current	weigth	secondary current 5A		secondary current 5A		secondary current 5A	
		code	VA	code	VA	code	VA
150	0,3			TAM5D 150A	2		
200				TAM5D 200A	2		
250				TAM5D 250A	3		
300		TAM5D 300A	4				
400		TAM5D 400A	4				

A	kg	class 0,5		class 1		class 3	
primary current	weigth	secondary current 5A		secondary current 5A		secondary current 5A	
		code	VA	code	VA	code	VA
500	0,3	TAM5D 500A	6				
600		TAM5D 600A	6				
800		TAM5D 800A	10				
1000		TAM5D 1k0A	10				
1200		TAM5D 1k2A	10				

TAM6

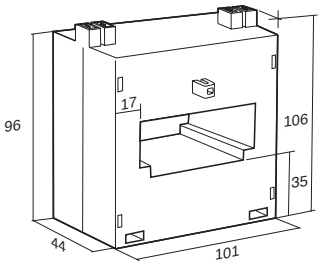

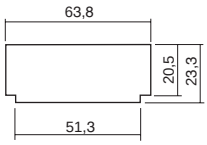

Central section

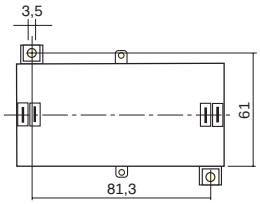

Base Mounting dimensions

Transformer suitable for primary current by two cables with maximum diameter 22mm or by horizontal bar 50x23, 63x20 mm

Screws M3,5x38

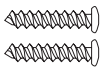

A	kg	class 0,5		class 1		class 3	
primary current	weigth	secondary current 5A		secondary current 5A		secondary current 5A	
		code	VA	code	VA	code	VA
300	0,5	TAM6 300A	5				
400		TAM6 400A	6				
500		TAM6 500A	6				
600	0,6	TAM6 600A	6				
800		TAM6 800A	10				

A	kg	class 0,5		class 1		class 3	
primary current	weigth	secondary current 5A		secondary current 5A		secondary current 5A	
		code	VA	code	VA	code	VA
1000	0,6	TAM6 1K0A	10				
1200		TAM6 1K2A	15				
1500	0,8	TAM6 1K5A	20				
1600		TAM6 1K6A	20				
2000		TAM6 2K0A	20				

SMALL SERIES - CURRENT TRANSFORMERS

- Three different possibilities of the secondary's connection to choose between: fast-on, metal point cable terminal or metal fork cable terminal
- Fixing system: to wall by an accessory or to DIN rail; directly to bus bar by the bolts supplied together with the current transformer
- Different characteristics on request
- **Secondary current 1A on request**
- Sealable terminal covers on request

TCS08

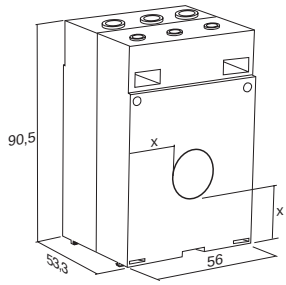

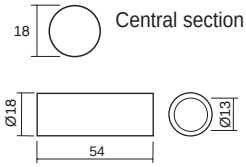

Brass rod OT63
UNI4892

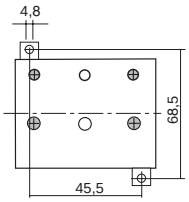

Base Mounting dimensions

- Transformer suitable for primary current by central rod with bolt M8
- ATCS2C Sealable terminal covers on request

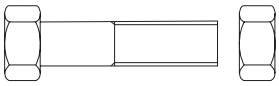

Bolt M8 + Stud nut
Steel UNI5727 Class 4,6

A primary current	kg weigth	class 0,5 secondary current 5A code	VA	class 1 secondary current 5A code	VA	class 3 secondary current 5A code	VA
40	0,6					TCS08 40A	3
50						TCS08 50A	4
60						TCS08 60A	5
75				TCS08 75A	5		
80				TCS08 80A	5		

A primary current	kg weigth	class 0,5 secondary current 5A code	VA	class 1 secondary current 5A code	VA	class 3 secondary current 5A code	VA
100	0,6			TCS08 100A	5		
120				TCS08 120A	5		
125				TCS08 125A	5		
150				TCS08 150A	5		

TCS012

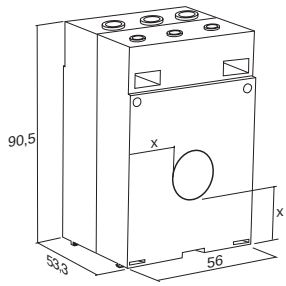

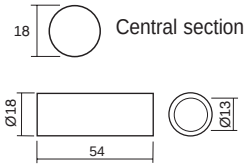

Brass rod OT63
UNI4892

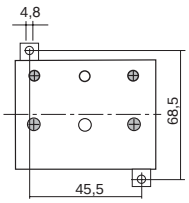

Base Mounting dimensions

- Transformer suitable for primary current by central roll with bolt M12
- ATCS2C Sealable terminal covers on request

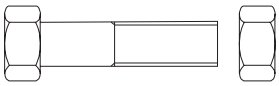

Bolt M12 + Stud nut
Steel UNI5727 Class 4,6

A primary current	kg weigth	class 0,5 secondary current 5A code	VA	class 1 secondary current 5A code	VA	class 3 secondary current 5A code	VA
200	0,7	TCS012 200A	5				
250		TCS012 250A	10				
300		TCS012 300A	10				

A primary current	kg weigth	class 0,5 secondary current 5A code	VA	class 1 secondary current 5A code	VA	class 3 secondary current 5A code	VA
400	0,6			TCS012 400A	10		
500				TCS012 500A	10		
600				TCS012 600A	10		

TCSM15

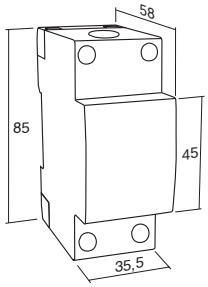

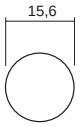

Central section

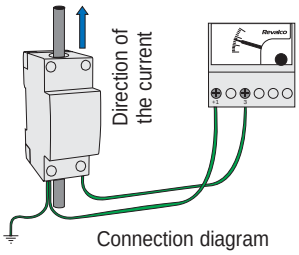

Connection diagram

- Two DIN module case transformer, suitable for primary current by cable with maximum diameter 15mm
- Minimum dimensions between the cables 35 mm
- Fixing system: to DIN rail

A primary current	kg weigth	class 0,5 secondary current 5A code	VA	class 1 secondary current 5A code	VA	class 3 secondary current 5A code	VA
40	0,25					TCSM15 40A	2
50						TCSM15 50A	2
60						TCSM15 60A	3
75						TCSM15 75A	3
80						TCSM15 80A	3

A primary current	kg weigth	class 0,5 secondary current 5A code	VA	class 1 secondary current 5A code	VA	class 3 secondary current 5A code	VA
100	0,25			TCSM15 100A	3		
120				TCSM15 120A	5		
125				TCSM15 125A	5		
150				TCSM15 150A	5		

TCS13

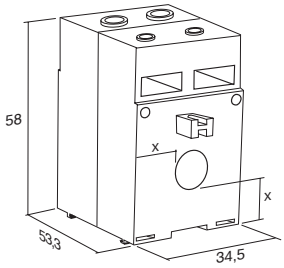

Central section

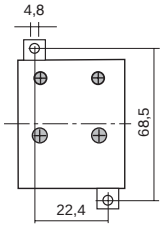

Base Mounting dimensions

- Transformer suitable for primary current by cable with maximum diameter 13mm
- Minimum dimensions between the cables 27mm
- ATCS1C Sealable terminal covers on request

Screws ABS 4,8x40

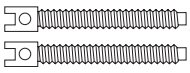

A	kg	class 0,5		class 1		class 3	
primary current	weigth	secondary current 5A		secondary current 5A		secondary current 5A	
		code	VA	code	VA	code	VA
40	0,22					TCS13 40A	2
50						TCS13 50A	2
60						TCS13 60A	3
75						TCS13 75A	3
80						TCS13 80A	3

A	kg	class 0,5		class 1		class 3	
primary current	weigth	secondary current 5A		secondary current 5A		secondary current 5A	
		code	VA	code	VA	code	VA
100	0,22			TCS13 100A	3		
120				TCS13 120A	5		
125				TCS13 125A	5		
150				TCS13 150A	5		

TCS16

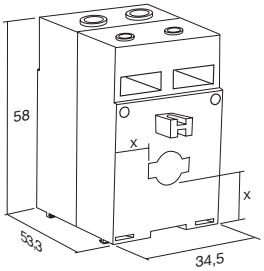

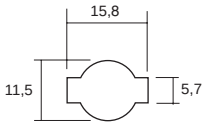

Central section

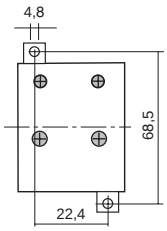

Base Mounting dimensions

- Transformer suitable for primary current by cable with maximum diameter 11mm or horizontal bar 15x5 mm
- Minimum dimension between the cables or the bars 27mm
- ATCS1C Sealable terminal covers on request

Screws ABS 4,8x40

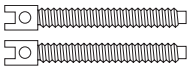

A	kg	class 0,5		class 1		class 3	
primary current	weigth	secondary current 5A		secondary current 5A		secondary current 5A	
		code	VA	code	VA	code	VA
60	0,2					TCS16 60A	3
75						TCS16 75A	3
80						TCS16 80A	3
100				TCS16 100A	3		

A	kg	class 0,5		class 1		class 3	
primary current	weigth	secondary current 5A		secondary current 5A		secondary current 5A	
		code	VA	code	VA	code	VA
120	0,2			TCS16 120A	5		
125				TCS16 125A	5		
150				TCS16 150A	5		

TCS18

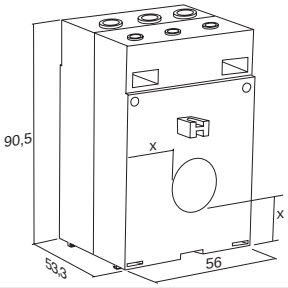

Central section

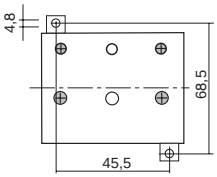

Base Mounting dimensions

- Transformer suitable for primary current by cable with maximum diameter 18 mm
- Minimum dimension between the cables 45 mm
- ATCS2C Sealable terminal covers on request

Screws ABS 4,8x40

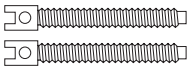

A	kg	class 0,5		class 1		class 3		class 0,2S		class 0,2		class 0,5S	
primary current	weigth	secondary current 5A		secondary current 5A		secondary current 5A		secondary current 5A		secondary current 5A		secondary current 5A	
		code	VA	code	VA	code	VA	code	VA	code	VA	code	VA
40	0,5					TCS18 40A	1,5						
50						TCS18 50A	3						
60						TCS18 60A	3						
75						TCS18 75A	3						
80						TCS18 80A	5						
100				TCS18 100A	2,5			TCS18 100A0,2S	1,5	TCS18 100A0,2	1,5	TCS18 100A0,5S	2,5
120				TCS18 120A	3			TCS18 120A0,2S	1,5	TCS18 120A0,2	1,5	TCS18 120A0,5S	2,5
125				TCS18 125A	3			TCS18 125A0,2S	1,5	TCS18 125A0,2	1,5	TCS18 125A0,5S	2,5
150		TCS18 150A	3,5					TCS18 150A0,2S	1,5	TCS18 150A0,2	1,5	TCS18 150A0,5S	3,5
200		TCS18 200A	5					TCS18 200A0,2S	1,5	TCS18 200A0,2	1,5	TCS18 200A0,5S	5
250		TCS18 250A	5					TCS18 250A0,2S	1,5	TCS18 250A0,2	1,5	TCS18 250A0,5S	5
300		TCS18 300A	5					TCS18 300A0,2S	1,5	TCS18 300A0,2	1,5	TCS18 300A0,5S	7,5

TCS25

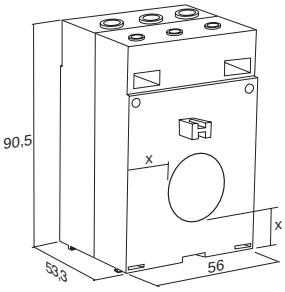

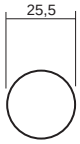

Central section

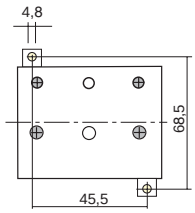

Base Mounting dimensions

- Transformer suitable for primary current by cable with maximum diameter 25mm
- Minimum dimension between the cables 45mm
- ATCS2C Sealable terminal covers on request

Viti ABS 4,8x40

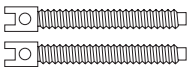

A primary current	kg weigth	class 0,5 secondary current 5A code	VA	class 1 secondary current 5A code	VA	class 3 secondary current 5A code	VA
40	0,4					TCS25 40A	1,5
50						TCS25 50A	3
60						TCS25 60A	3
75						TCS25 75A	3
80						TCS25 80A	5
100				TCS25 100A	2,5		
120				TCS25 120A	3		

A primary current	kg weigth	class 0,5 secondary current 5A code	VA	class 1 secondary current 5A code	VA	class 3 secondary current 5A code	VA
125	0,4			TCS25 125A	3		
150		TCS25 150A	3,5				
200		TCS25 200A	5				
250		TCS25 250A	6				
300		TCS25 300A	6				
400		TCS25 400A	10				

TCS26

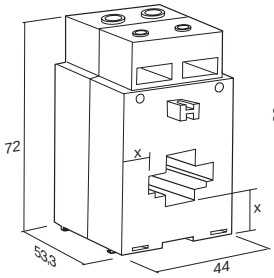

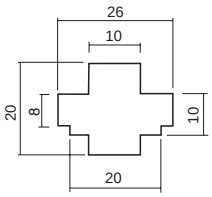

Central section

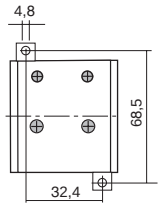

Base Mounting dimensions

- Transformer suitable for primary current by horizontal bar 15x5, 20x5, 25x5, 25x6,5mm or vertical bar 15x5, 20x5 mm
- Minimum dimension between the bars 35mm
- ATCS1C Sealable terminal covers on request

Screws ABS 4,8x40

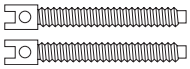

A primary current	kg weigth	class 0,5 secondary current 5A code	VA	class 1 secondary current 5A code	VA	class 3 secondary current 5A code	VA
100	0,25			TCS26 100A	3		
120				TCS26 120A	5		
125				TCS26 125A	5		
150				TCS26 150A	5		

A primary current	kg weigth	class 0,5 secondary current 5A code	VA	class 1 secondary current 5A code	VA	class 3 secondary current 5A code	VA
200	0,25			TCS26 200A	5		
250				TCS26 250A	5		
300		TCS26 300A	5				

TCS32

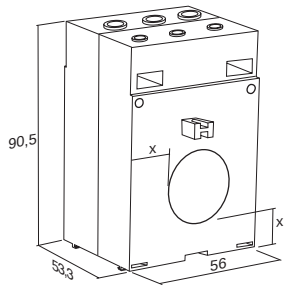

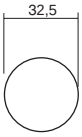

Central section

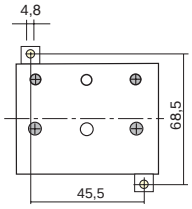

Base Mounting dimensions

- Transformer suitable for primary current by cable with maximum diameter 32 mm
- Minimum dimension between the cables 45 mm
- ATCS2C Sealable terminal covers on request

Screws ABS 4,8x40

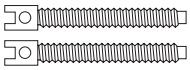

A primary current	kg weigth	class 0,5 secondary current 5A code	VA	class 1 secondary current 5A code	VA	class 3 secondary current 5A code	VA
100	0,3			TCS32 100A	3		
120				TCS32 120A	3		
125				TCS32 125A	3		
150				TCS32 150A	3		
200		TCS32 200A	5				

A primary current	kg weigth	class 0,5 secondary current 5A code	VA	class 1 secondary current 5A code	VA	class 3 secondary current 5A code	VA
250	0,3	TCS32 250A	5				
300		TCS32 300A	5				
400		TCS32 400A	6				
500		TCS32 500A	10				
600		TCS32 600A	10				

TCS33

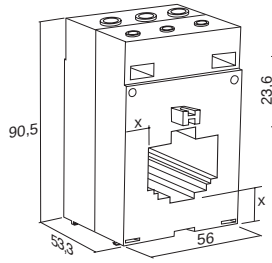

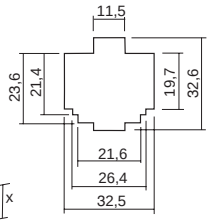

Central section

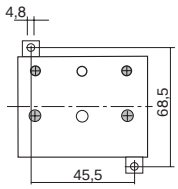

Base Mounting dimensions

- Transformer suitable for primary current by horizontal bar 29x9,5 - 29x10,5 - 29x12,5 - 30x5 - 30x6 - 30x8 - 30x10 - 2x30x5 - 2x32x5 mm or vertical bar: 32x5 mm
- Minimum dimension between the horizontal bars 45mm, between the vertical bars 35mm
- ATCS2C Sealable terminal covers on request

Screws ABS 4,8x40

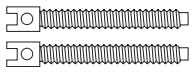

A	kg	class 0,5		class 1		class 3	
primary current	weigth	secondary current 5A		secondary current 5A		secondary current 5A	
		code	VA	code	VA	code	VA
100				TCS33 100A	1,5		
120				TCS33 120A	1,5		
125	0,3			TCS33 125A	1,5		
150				TCS33 150A	2		
200				TCS33 200A	3		

A	kg	class 0,5		class 1		class 3	
primary current	weigth	secondary current 5A		secondary current 5A		secondary current 5A	
		code	VA	code	VA	code	VA
250				TCS33 250A	3,75		
300		TCS33 300A	3,5				
400	0,3	TCS33 400A	3,5				
500		TCS33 500A	5				
600		TCS33 600A	5				

TCS64

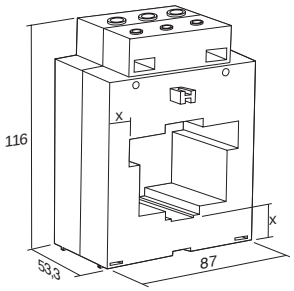

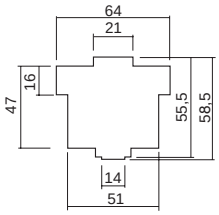

Central section

- Transformer suitable for primary current by horizontal bar 30x30 - 30x45 - 37x9,5 - 37x13 - 50x10 - 55x9,5 - 55x13 - 63x5 - 2x50x5 - 2x50x10 - 2x63x5 - 3x50x5 mm or vertical bar 50x5 - 2x50x5 - 2x50x10 - 3x50x5 mm
- Minimum dimension between horizontal bars 70 mm; between vertical bars 50 mm
- ATCS2C Sealable terminal covers on request

Screws ABS 4,8x40

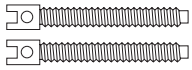

A	kg	class 0,5		class 1		class 3	
primary current	weigth	secondary current 5A		secondary current 5A		secondary current 5A	
		code	VA	code	VA	code	VA
200				TCS64 200A	2		
250				TCS64 250A	5		
300	0,5			TCS64 300A	5		
400		TCS64 400A	5				
500		TCS64 500A	10				

A	kg	class 0,5		class 1		class 3	
primary current	weigth	secondary current 5A		secondary current 5A		secondary current 5A	
		code	VA	code	VA	code	VA
600		TCS64 600A	10				
800		TCS64 800A	10				
1000	0,5	TCS64 1K0A	15				
1200		TCS64 1K20A	15				
1250		TCS64 1K25A	15				

TCS647

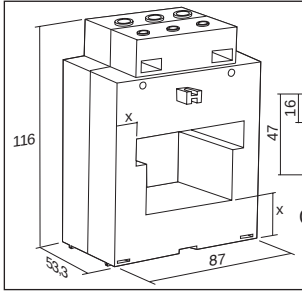

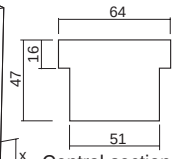

Central section

- Transformer suitable for primary current by horizontal bar 30x30 - 30x45 - 37x9,5 - 37x13 - 50x10 - 55x9,5 - 55x13 - 63x5 - 2x50x5 - 2x50x10 - 2x63x5 - 3x50x5 mm or vertical bar 40x5 - 2x40x5 - 2x40x10 - 3x40x5 mm
- Minimum dimension between horizontal bars 70 mm; between vertical bars 50 mm
- ATCS2C Sealable terminal covers on request

Screws ABS 4,8x40

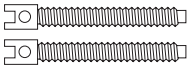

A	kg	class 0,5		class 1		class 3		class 0,2S		class 0,2		class 0,5S	
primary current	weigth	secondary current 5A		secondary current 5A		secondary current 5A		secondary current 5A		secondary current 5A		secondary current 5A	
		code	VA	code	VA	code	VA	code	VA	code	VA	code	VA
200				TCS647 200A	5								
250				TCS647 250A	5								
300				TCS647 300A	5								
400		TCS647 400A	5										
500		TCS647 500A	7,5										
600	0,6	TCS647 600A	7,5					TCS647 600A0,2S	3	TCS647 600A0,2	3	TCS647 600A0,5S	10
800		TCS647 800A	10					TCS647 800A0,2S	3	TCS647 800A0,2	3	TCS647 800A0,5S	10
1000		TCS647 1K0A	15					TCS647 1K0A0,2S	3	TCS647 1K0A0,2	4	TCS647 1K0A0,5S	15
1200		TCS647 1K2A	15					TCS647 1K2A0,2S	4	TCS647 1K2A0,2	5	TCS647 1K2A0,5S	15
1250		TCS647 1K25A	15					TCS647 1K25A0,2S	4	TCS647 1K25A0,2	5	TCS647 1K25A0,5S	15
1500		TCS647 1K5A	15					TCS647 1K5A0,2S	4	TCS647 1K5A0,2	5	TCS647 1K5A0,5S	15

TCS126

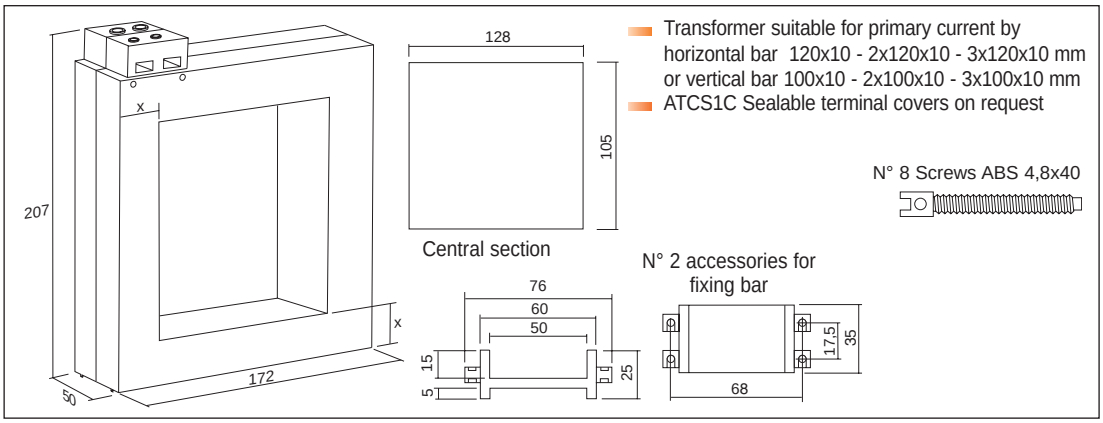

- Transformer suitable for primary current by horizontal bar 120x10 - 2x120x10 - 3x120x10 mm or vertical bar 100x10 - 2x100x10 - 3x100x10 mm
- ATCS1C Sealable terminal covers on request

A	kg	class 0,5		class 1		class 3		class 0,2S		class 0,2		class 0,5S	
primary current	weigth	secondary current 5A		secondary current 5A		secondary current 5A		secondary current 5A		secondary current 5A		secondary current 5A	
		code	VA	code	VA	code	VA	code	VA	code	VA	code	VA
1000	1	TCS126 1K0A	10					TCS126 1K0A0,2S	3	TCS126 1K0A0,2	5	TCS126 1K0A0,5S	10
1200		TCS126 1K2A	10					TCS126 1K2A0,2S	4	TCS126 1K2A0,2	6	TCS126 1K2A0,5S	10
1250		TCS126 1K25A	10					TCS126 1K25A0,2S	4	TCS126 1K25A0,2	6	TCS126 1K25A0,5S	10
1500		TCS126 1K5A	15					TCS126 1K5A0,2S	5	TCS126 1K5A0,2	8	TCS126 1K5A0,5S	15
2000		TCS126 2K0A	15										
2500		TCS126 2K5A	15										

TCS200

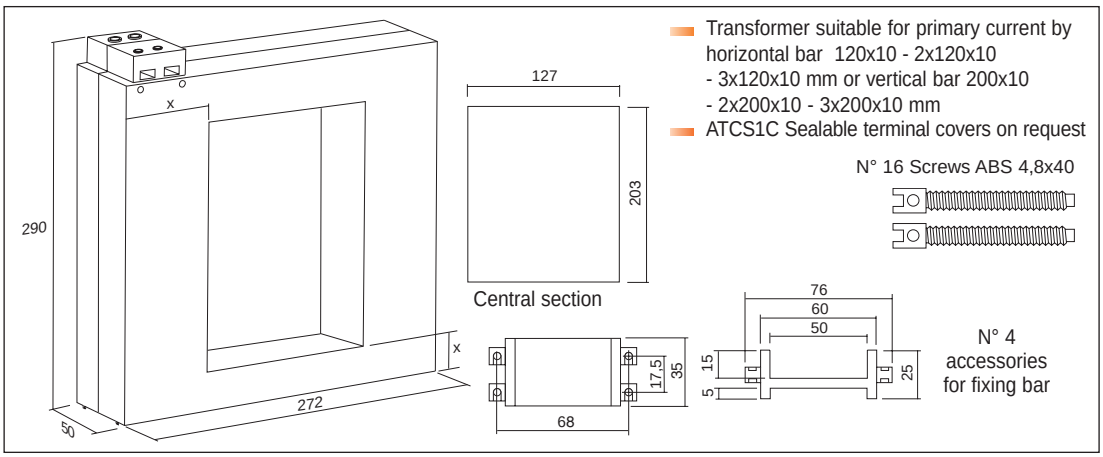

- Transformer suitable for primary current by horizontal bar 120x10 - 2x120x10 - 3x120x10 mm or vertical bar 200x10 - 2x200x10 - 3x200x10 mm
- ATCS1C Sealable terminal covers on request

A	kg	class 0,5		class 1		class 3		class 0,2S		class 0,2		class 0,5S	
primary current	weigth	secondary current 5A		secondary current 5A		secondary current 5A		secondary current 5A		secondary current 5A		secondary current 5A	
		code	VA	code	VA	code	VA	code	VA	code	VA	code	VA
1000	1,6	TCS200 1K0A	10										
1200		TCS200 1K2A	15										
1250		TCS200 1K25A	15										
1500		TCS200 1K5A	15					TCS200 1K5A0,2S	3	TCS200 1K5A0,2	10	TCS200 1K5A0,5S	10
2000		TCS200 2K0A	20					TCS200 2K0A0,2S	5	TCS200 2K0A0,2	15	TCS200 2K0A0,5S	15
2500		TCS200 2K5A	30					TCS200 2K5A0,2S	10	TCS200 2K5A0,2	20	TCS200 2K5A0,5S	20
3000		TCS200 3K0A	30					TCS200 3K0A0,2S	15	TCS200 3K0A0,2	30	TCS200 3K0A0,5S	30
4000		TCS200 4K0A	30					TCS200 4K0A0,2S	20	TCS200 4K0A0,2	40	TCS200 4K0A0,5S	40
5000		TCS200 5K0A	30										
6000		TCS200 6K0A	30										

TCS65V

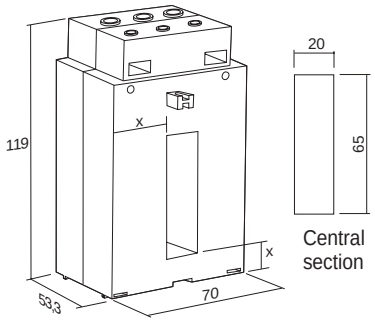

- Transformer suitable for primary current by vertical bar 2x63x5 - 3x63x5 mm
- Minimum dimension between the bars 45 mm
- ATCS2C Sealable terminal covers on request

Screws ABS 4,8x40

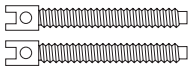

A	kg	class 0,5		class 1		class 3	
primary current	weigth	secondary current 5A		secondary current 5A		secondary current 5A	
		code	VA	code	VA	code	VA
200	0,5	TCS65V 200A	1				
250		TCS65V 250A	1				
300		TCS65V 300A	3				
400		TCS65V 400A	5				
500		TCS65V 500A	10				

A	kg	class 0,5		class 1		class 3	
primary current	weigth	secondary current 5A		secondary current 5A		secondary current 5A	
		code	VA	code	VA	code	VA
600	0,5	TCS65V 600A	10				
800		TCS65V 800A	10				
1000		TCS65V 1K0A	15				
1200		TCS65V 1K2A	15				
1250		TCS65V 1K25A	15				

TCS126V

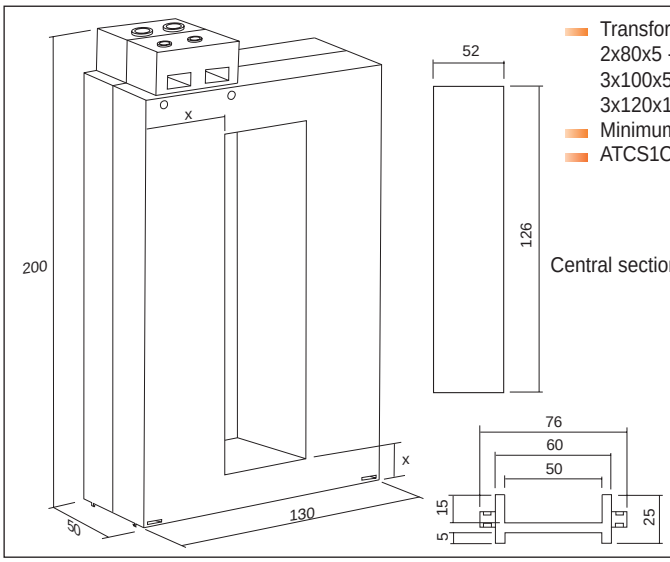

- Transformer suitable for primary current by vertical bar 2x80x5 - 2x80x10 - 3x80x5 - 5x80x5 - 2x100x5 - 3x100x5 - 4x100x5 - 100x10 - 2x100x10 - 5x100x5 - 3x120x10 - 2x125x5 mm
- Minimum dimension between the bars 75 mm
- ATCS1C Sealable terminal covers on request

N° 8 Screws ABS 4,8x40

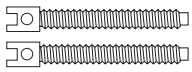

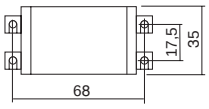

N° 2 accessories
for fixing bar

A	kg	class 0,5		class 1		class 3	
primary current	weigth	secondary current 5A		secondary current 5A		secondary current 5A	
		code	VA	code	VA	code	VA
400	0,5	TCS126V 400A	5				
500		TCS126V 500A	10				
600		TCS126V 600A	10				
800		TCS126V 800A	10				
1000		TCS126V 1K0A	15				

A	kg	class 0,5		class 1		class 3	
primary current	weigth	secondary current 5A		secondary current 5A		secondary current 5A	
		code	VA	code	VA	code	VA
1200	0,5	TCS126V 1K2A	15				
1250		TCS126V 1K25A	15				
1500		TCS126V 1K5A	20				
2000		TCS126V 2K0A	20				
2500		TCS126V 2K5A	20				

TCS166V

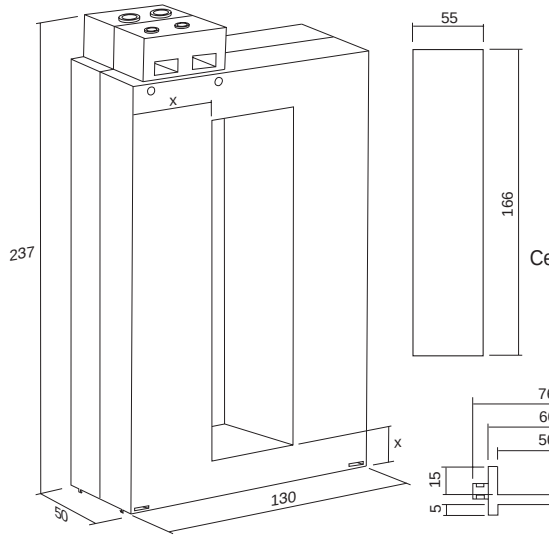

- Transformer suitable for primary current by vertical bar 2x80x5 - 2x80x10 - 3x80x5 - 5x80x5 - 2x100x5 - 3x100x5 - 4x100x5 - 100x10 - 2x100x10 - 5x100x5 - 3x120x10 - 2x125x10 - 2x160x10 mm
- Minimum dimension between the bars 75 mm
- ATCS1C Sealable terminal covers on request

N° 8 Screws ABS 4,8x40

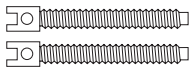

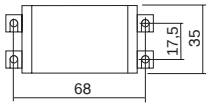

N° 2 accessories for fixing bar

A	kg	class 0,5		class 1		class 3	
primary current	weigth	secondary current 5A		secondary current 5A		secondary current 5A	
		code	VA	code	VA	code	VA
1250		TCS166V 1K25A	20				
1500		TCS166V 1K5A	20				
2000		TCS166V 2K0A	20				
2500		TCS166V 2K5A	20				

A	kg	class 0,5		class 1		class 3	
primary current	weigth	secondary current 5A		secondary current 5A		secondary current 5A	
		code	VA	code	VA	code	VA
3000		TCS166V 3K0A	20				
4000		TCS166V 4K0A	30				
5000		TCS166V 5K0A	30				

STANDARD SERIES - CURRENT TRANSFORMERS

- The short circuit on terminals or the connection to earth can be achieved by the double fast-on or connecting two wires on the same terminal
- Sealable terminals cover included
- Different characteristics on request
- Fixing system: to wall or to DIN rail by accessories supplied together with the current transformer
- **Secondary current 1A on request**

TARPDE1

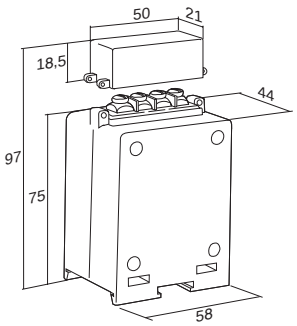

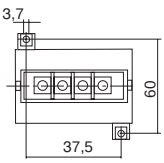

Base Mounting dimensions

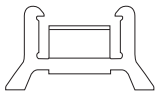

DIN rail accessory

- Transformer with wound primary cable, primary and secondary currents on the terminals

A	kg	class 0,5		class 1		class 3	
primary current	weigth	secondary current 5A		secondary current 5A		secondary current 5A	
		code	VA	code	VA	code	VA
1	0,4			TARPDE1 1A	3		
5				TARPDE1 5A	3		
10				TARPDE1 10A	3		
15				TARPDE1 15A	3		

A	kg	class 0,5		class 1		class 3	
primary current	weigth	secondary current 5A		secondary current 5A		secondary current 5A	
		code	VA	code	VA	code	VA
20	0,4			TARPDE1 20A	3		
25				TARPDE1 25A	3		
30				TARPDE1 30A	3		
40				TARPDE1 40A	3		

TARPDE2

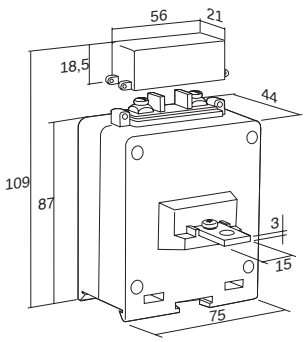

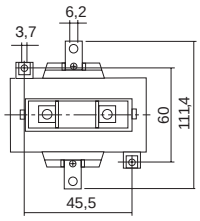

Base Mounting dimensions

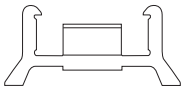

DIN rail accessory

Transformer with wound primary cable, primary current by central incorporated bar 15x3 mm; secondary current on terminals

A	kg	class 0,5		class 1		class 3	
primary current	weigth	secondary current 5A		secondary current 5A		secondary current 5A	
		code	VA	code	VA	code	VA
50	0,5			TARPDE2 50A	3		
60				TARPDE2 60A	3		
80				TARPDE2 80A	3		

A	kg	class 0,5		class 1		class 3	
primary current	weigth	secondary current 5A		secondary current 5A		secondary current 5A	
		code	VA	code	VA	code	VA
100	0,5			TARPDE2 100A	3		
125				TARPDE2 125A	3		
150				TARPDE2 150A	3		

TARPD1

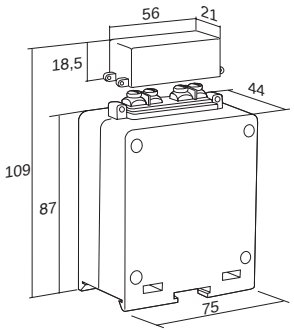

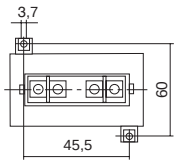

Base Mounting dimensions

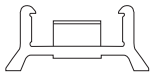

DIN rail accessory

Transformer with wound primary cable, primary and secondary currents on the terminals

A	kg	class 0,5		class 1		class 3	
primary current	weigth	secondary current 5A		secondary current 5A		secondary current 5A	
		code	VA	code	VA	code	VA
1	0,5	TARPD1 1A	6				
5		TARPD1 5A	6				
10		TARPD1 10A	6				
15		TARPD1 15A	6				

A	kg	class 0,5		class 1		class 3	
primary current	weigth	secondary current 5A		secondary current 5A		secondary current 5A	
		code	VA	code	VA	code	VA
20	0,4	TARPD1 20A	6				
25		TARPD1 25A	6				
30		TARPD1 30A	6				
40		TARPD1 40A	6				

TARPD2

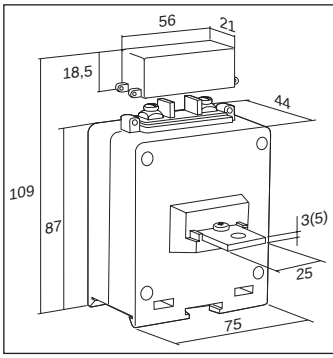

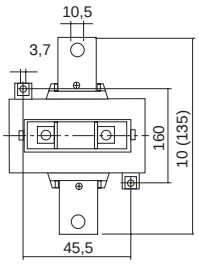

Base Mounting dimensions

DIN rail accessory

Transformer with wound primary cable, primary current by central incorporated bar 25x3 mm up to 300A, 25x5 mm from 400 to 500A secondary current on terminals

A	kg	class 0,5		class 1		class 3	
primary current	weigth	secondary current 5A		secondary current 5A		secondary current 5A	
		code	VA	code	VA	code	VA
50	0,5	TARPD2 50A	6				
60		TARPD2 60A	6				
80		TARPD2 80A	6				
100		TARPD2 100A	6				
125		TARPD2 125A	6				
150		TARPD2 150A	6				

A	kg	class 0,5		class 1		class 3	
primary current	weigth	secondary current 5A		secondary current 5A		secondary current 5A	
		code	VA	code	VA	code	VA
200	0,5	TARPD2 200A	6				
250		TARPD2 250A	6				
300		TARPD2 300A	6				
400		TARPD2 400A	6				
500		TARPD2 500A	6				

TAR0

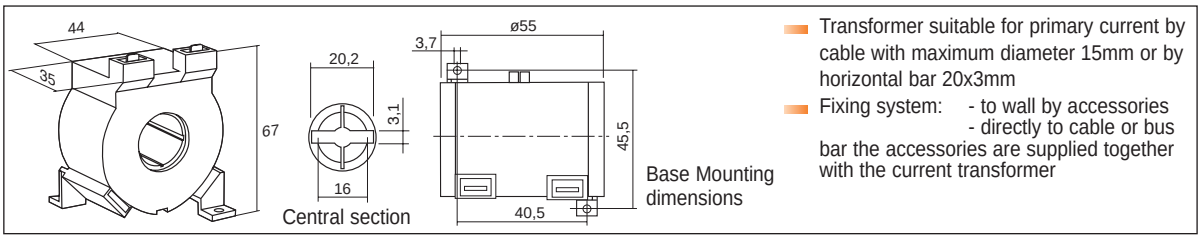

- Transformer suitable for primary current by cable with maximum diameter 15mm or by horizontal bar 20x3mm
- Fixing system: - to wall by accessories
  - directly to cable or bus bar the accessories are supplied together with the current transformer

A	kg	class 0,5		class 1		class 3	
primary current	weigth	secondary current 5A		secondary current 5A		secondary current 5A	
		code	VA	code	VA	code	VA
40	0,25					TAR0 40A	2
50						TAR0 50A	2
60						TAR0 60A	3
80						TAR0 80A	3
100				TAR0 100A	3		

A	kg	class 0,5		class 1		class 3	
primary current	weigth	secondary current 5A		secondary current 5A		secondary current 5A	
		code	VA	code	VA	code	VA
125	0,25	TAR0 125A	3				
150		TAR0 150A	3				
200		TAR0 200A	3				
250		TAR0 250A	5				

TAR1D

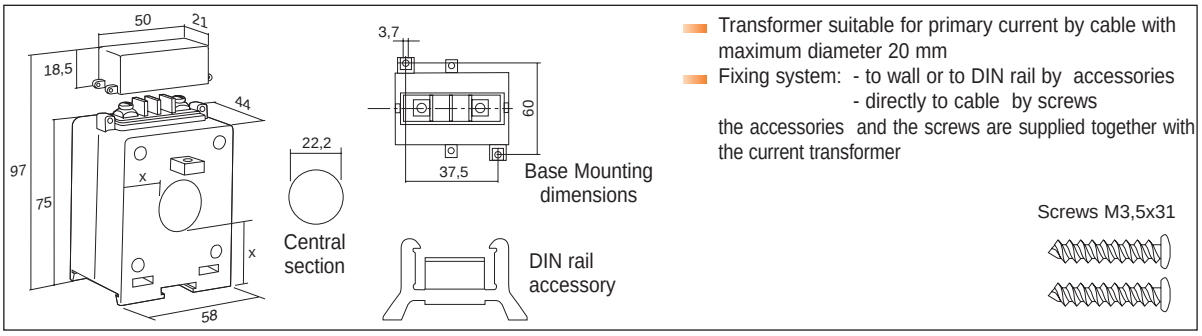

- Transformer suitable for primary current by cable with maximum diameter 20 mm
- Fixing system: - to wall or to DIN rail by accessories
  - directly to cable by screws
  the accessories and the screws are supplied together with the current transformer

A	kg	class 0,5		class 1		class 3	
primary current	weigth	secondary current 5A		secondary current 5A		secondary current 5A	
		code	VA	code	VA	code	VA
40	0,3					TAR1D 40A	2
50						TAR1D 50A	3
60						TAR1D 60A	3
80						TAR1D 80A	3
100				TAR1D 100A	3		

A	kg	class 0,5		class 1		class 3	
primary current	weigth	secondary current 5A		secondary current 5A		secondary current 5A	
		code	VA	code	VA	code	VA
125	0,3	TAR1D 125A	3				
150		TAR1D 150A	3				
200		TAR1D 200A	3				
250		TAR1D 250A	5				

TAR3D

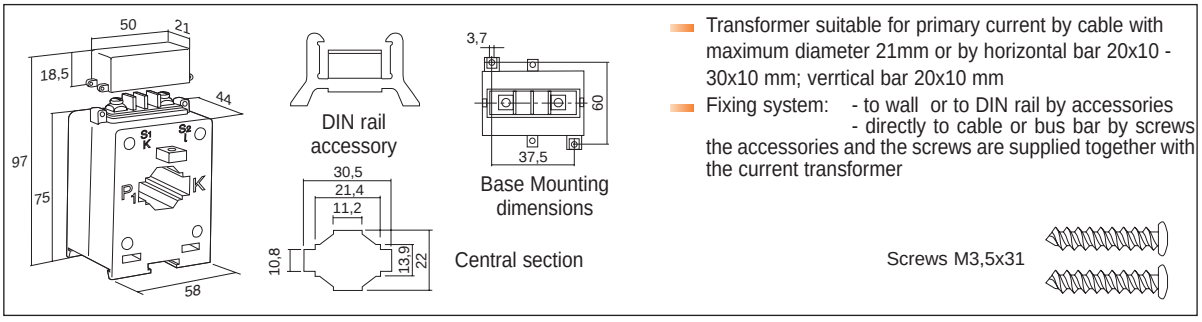

- Transformer suitable for primary current by cable with maximum diameter 21mm or by horizontal bar 20x10 - 30x10 mm; verrtical bar 20x10 mm
- Fixing system: - to wall or to DIN rail by accessories
  - directly to cable or bus bar by screws
  the accessories and the screws are supplied together with the current transformer

A	kg	class 0,5		class 1		class 3		class 0,2S		class 0,2		class 0,5S	
primary current	weigth	secondary current 5A		secondary current 5A		secondary current 5A		secondary current 5A		secondary current 5A		secondary current 5A	
		code	VA	code	VA	code	VA	code	VA	code	VA	code	VA
50	0,3					TAR3D 50A	2						
60						TAR3D 60A	2						
80						TAR3D 80A	3						
100				TAR3D 100A	2,5								
125		TAR3D 125A	2,5										
150		TAR3D 150A	3									TAR3D 150A	1,5
200		TAR3D 200A	3									TAR3D 200A	2
250		TAR3D 250A	5									TAR3D 250A	2
300		TAR3D 300A	5									TAR3D 300A	1,5
400		TAR3D 400A	6									TAR3D 400A	1,5
500		TAR3D 500A	6									TAR3D 500A	1,5
600		TAR3D 600A	6									TAR3D 600A	2

TAR4D3

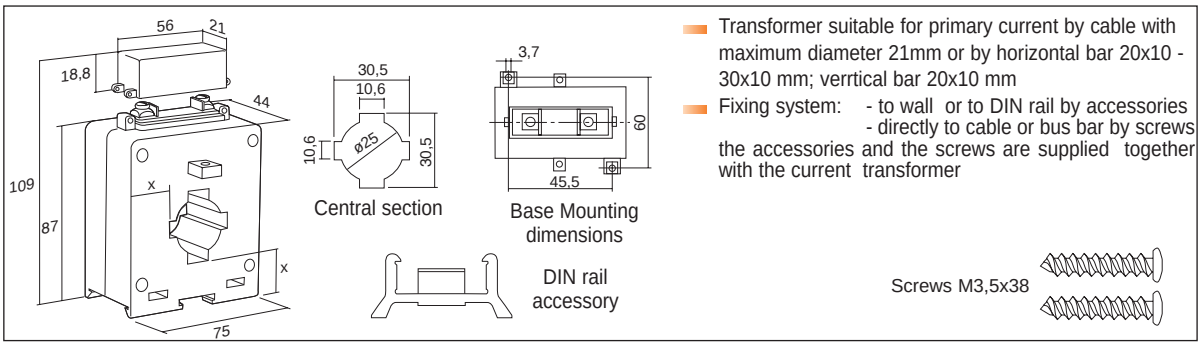

- Transformer suitable for primary current by cable with maximum diameter 21mm or by horizontal bar 20x10 - 30x10 mm; verrtical bar 20x10 mm
- Fixing system: - to wall or to DIN rail by accessories
  - directly to cable or bus bar by screws

  the accessories and the screws are supplied together with the current transformer

A	kg	class 0,5		class 1		class 3		class 0,2S		class 0,2		class 0,5S	
primary current	weigth	secondary current 5A		secondary current 5A		secondary current 5A		secondary current 5A		secondary current 5A		secondary current 5A	
		code	VA	code	VA	code	VA	code	VA	code	VA	code	VA
100		TAR4D3 100A	3					TAR4D3 100A0,2S	1,5	TAR4D3 100A0,2	1,5	TAR4D3 100A0,5S	2,5
125		TAR4D3 125A	3					TAR4D3 125A0,2S	1,5	TAR4D3 125A0,2	1,5	TAR4D3 125A0,5S	2,5
150		TAR4D3 150A	5					TAR4D3 150A0,2S	1,5	TAR4D3 150A0,2	1,5	TAR4D3 150A0,5S	3,5
200		TAR4D3 200A	6					TAR4D3 200A0,2S	1,5	TAR4D3 200A0,2	1,5	TAR4D3 200A0,5S	5
250		TAR4D3 250A	10					TAR4D3 250A0,2S	1,5	TAR4D3 250A0,2	1,5	TAR4D3 250A0,5S	5
300	0,3	TAR4D3 300A	10					TAR4D3 300A0,2S	1,5	TAR4D3 300A0,2	1,5	TAR4D3 300A0,5S	7,5
400		TAR4D3 400A	10					TAR4D3 400A0,2S	1,5	TAR4D3 400A0,2	1,5	TAR4D3 400A0,5S	10
500		TAR4D3 500A	10										
600		TAR4D3 600A	10										

TAR4D

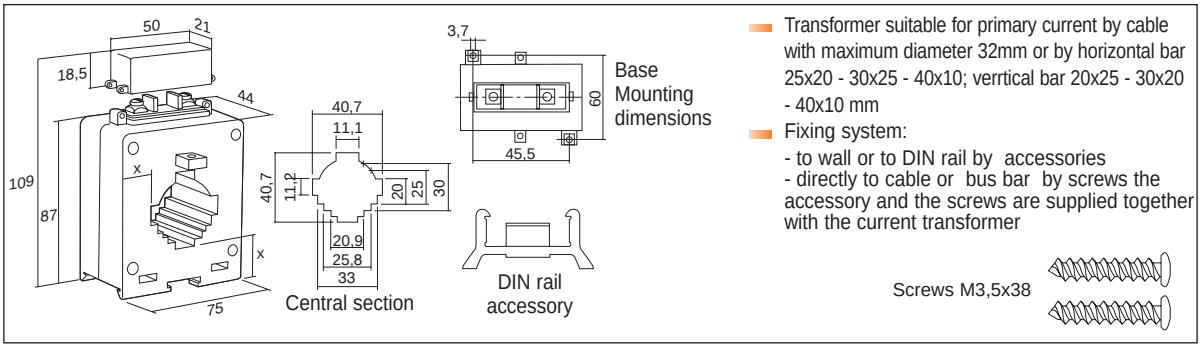

- Transformer suitable for primary current by cable with maximum diameter 32mm or by horizontal bar 25x20 - 30x25 - 40x10; verrtical bar 20x25 - 30x20 - 40x10 mm
- Fixing system:
  - to wall or to DIN rail by accessories
  - directly to cable or bus bar by screws the accessory and the screws are supplied together with the current transformer

A	kg	class 0,5		class 1		class 3		class 0,2S		class 0,2		class 0,5S	
primary current	weigth	secondary current 5A		secondary current 5A		secondary current 5A		secondary current 5A		secondary current 5A		secondary current 5A	
		code	VA	code	VA	code	VA	code	VA	code	VA	code	VA
150				TAR4D 150A	3							TAR4D 150A0,5S	1
200				TAR4D 200A	4			TAR4D 200A0,2S	1,5	TAR4D 200A0,2	1,5	TAR4D 200A0,5S	1,5
250				TAR4D 250A	6			TAR4D 250A0,2S	2	TAR4D 250A0,2	2	TAR4D 250A0,5S	2
300		TAR4D 300A	6					TAR4D 300A0,2S	2	TAR4D 300A0,2	2	TAR4D 300A0,5S	2
400	0,5	TAR4D 400A	10					TAR4D 400A0,2S	3	TAR4D 400A0,2	3	TAR4D 400A0,5S	3
500		TAR4D 500A	10					TAR4D 500A0,2S	3	TAR4D 500A0,2	3	TAR4D 500A0,5S	3
600		TAR4D 600A	10					TAR4D 600A0,2S	3	TAR4D 600A0,2	4	TAR4D 600A0,5S	4
750		TAR4D 750A	10					TAR4D 750A0,2S	4	TAR4D 750A0,2	4	TAR4D 750A0,5S	5
800		TAR4D 800A	10					TAR4D 800A0,2S	4	TAR4D 800A0,2	4	TAR4D 800A0,5S	5

TAR5

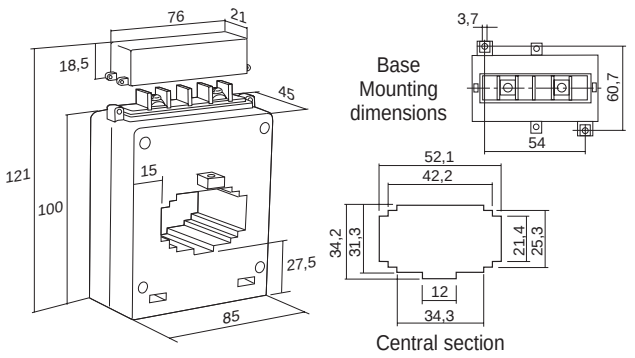

- Transformer suitable for primary current by cable with maximum diameter 30 mm or by horizontal bar 30x30 - 40x25 - 50x20 mm; verrtical bar 30x10 mm
- Fixing system:
  - to wall or DIN rail by accessories
  - directly to cable or bus bar by screws the accessory and the screws are supplied together with the current transformer

Screws M3,5x38

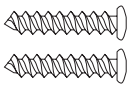

A	kg	class 0,5		class 1		class 3		class 0,2S		class 0,2		class 0,5S	
primary current	weigth	secondary current 5A		secondary current 5A		secondary current 5A		secondary current 5A		secondary current 5A		secondary current 5A	
		code	VA	code	VA	code	VA	code	VA	code	VA	code	VA
200				TAR5 200A	4								
250		TAR5 250A	3					TAR5 250A0,2S	2	TAR5 250A0,2	2	TAR5 250A0,5S	2
300		TAR5 300A	4					TAR5 300A0,2S	2	TAR5 300A0,2	2	TAR5 300A0,5S	2
400		TAR5 400A	6					TAR5 400A0,2S	3	TAR5 400A0,2	3	TAR5 400A0,5S	3
500		TAR5 500A	10					TAR5 500A0,2S	3	TAR5 500A0,2	3	TAR5 500A0,5S	3
600	0,5	TAR5 600A	10					TAR5 600A0,2S	3	TAR5 600A0,2	4	TAR5 600A0,5S	4
750		AR5 750A	10					TAR5 750A0,2S	3	TAR5 750A0,2	4	TAR5 750A0,5S	4
800		TAR5 800A	10					TAR5 800A0,2S	4	TAR5 800A0,2	4	TAR5 800A0,5S	5
1000		TAR5 1K0A	10					TAR5 1K0A0,2S	5	TAR5 1K0A0,2	5	TAR5 1K0A0,5S	5
1200		TAR5 1K2A	10					TAR5 1K2A0,2S	6	TAR5 1K2A0,2	6	TAR5 1K2A0,5S	6
1500		TAR5 1K5A	20					TAR5 1K5A0,2S	6	TAR5 1K5A0,2	6	TAR5 1K5A0,5S	6

TAR6

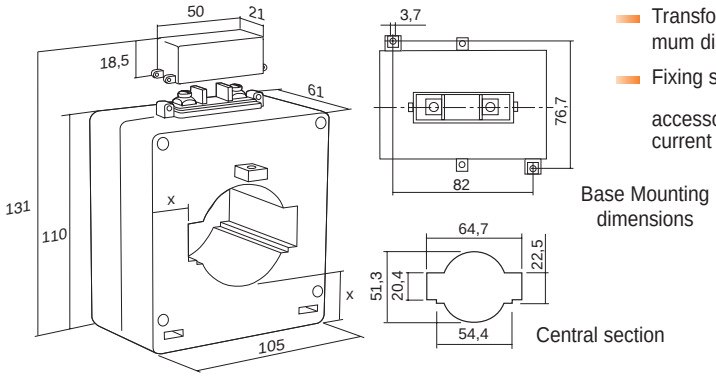

- Transformer suitable for primary current by cable with maximum diameter 50mm or by horizontal bar 50x20 - 60x20 mm
- Fixing system: - to wall by accessories
  - directly to cable or bus bar by screws the accessories and the screws are supplied together with the current transformer

Screws M3,5x38

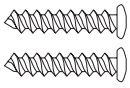

A	kg	class 0,5		class 1		class 3		class 0,2S		class 0,2		class 0,5S	
primary current	weigth	secondary current 5A		secondary current 5A		secondary current 5A		secondary current 5A		secondary current 5A		secondary current 5A	
		code	VA	code	VA	code	VA	code	VA	code	VA	code	VA
400	1	TAR6 400A	6										
500		TAR6 500A	6										
600		TAR6 600A	10					TAR6 600A0,2S	4	TAR6 600A0,2	5	TAR6 600A0,5S	6
750		TAR6 750A	10					TAR6 750A0,2S	4	TAR6 750A0,2	5	TAR6 750A0,5S	6
800	0,7	TAR6 800A	10					TAR6 800A0,2S	4	TAR6 800A0,2	5	TAR6 800A0,5S	6
1000		TAR6 1K0A	10					TAR6 1K0A0,2S	5	TAR6 1K0A0,2	5	TAR6 1K0A0,5S	6
1200		TAR6 1K2A	15					TAR6 1K2A0,2S	5	TAR6 1K2A0,2	5	TAR6 1K2A0,5S	6
1500		TAR6 1K5A	20					TAR6 1K5A0,2S	5	TAR6 1K5A0,2	5	TAR6 1K5A0,5S	6
1600	0,8	TAR6 1K6A	20					TAR6 1K6A0,2S	5	TAR6 1K6A0,2	5	TAR6 1K6A0,5S	6
2000		TAR6 2K0A	20										
2500	1	TAR6 2K5A	20										

TAR8

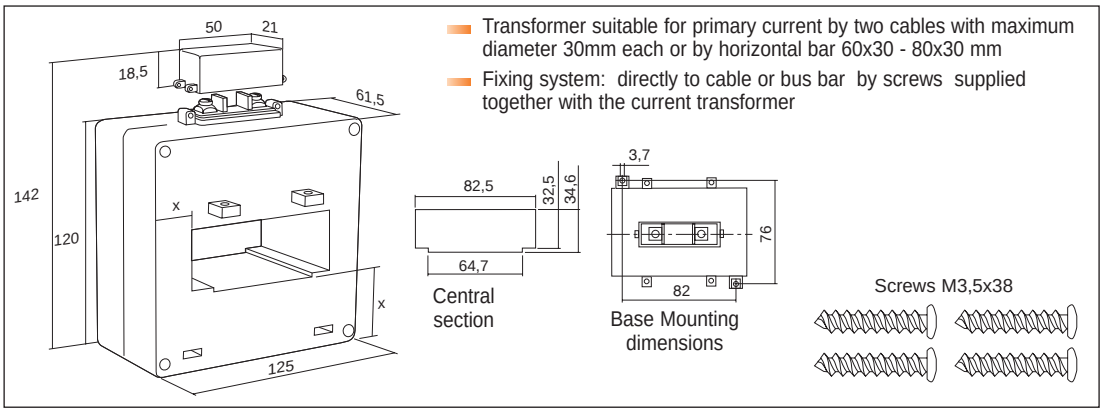

- Transformer suitable for primary current by two cables with maximum diameter 30mm each or by horizontal bar 60x30 - 80x30 mm
- Fixing system: directly to cable or bus bar by screws supplied together with the current transformer

A	kg	class 0,5		class 1		class 3		class 0,2S		class 0,2		class 0,5S	
primary current	weigth	secondary current 5A		secondary current 5A		secondary current 5A		secondary current 5A		secondary current 5A		secondary current 5A	
		code	VA	code	VA	code	VA	code	VA	code	VA	code	VA
400	0,8	TAR8 400A	6										
500	1	TAR8 500A	10										
600		TAR8 600A	10										
750		TAR8 750A	10										
800		TAR8 800A	10										
1000	0,7	TAR8 1K0A	10					TAR8 1K0A0,2S	5	TAR8 1K0A0,2	5	TAR8 1K0A0,5S	6
1200		TAR8 1K2A	15					TAR8 1K2A0,2S	5	TAR8 1K2A0,2	5	TAR8 1K2A0,5S	6
1500	1	TAR8 1K5A	20					TAR8 1K5A0,2S	5	TAR8 1K5A0,2	5	TAR8 1K5A0,5S	6
1600		TAR8 1K6A	20					TAR8 1K6A0,2S	10	TAR8 1K6A0,2	10	TAR8 1K6A0,5S	15
2000		TAR8 2K0A	20					TAR8 2K0A0,2S	10	TAR8 2K0A0,2	10	TAR8 2K0A0,5S	15
2500		TAR8 2K5A	20					TAR8 2K5A0,2S	10	TAR8 2K5A0,2	10	TAR8 2K5A0,5S	15
3000	1,5	TAR8 3K0A	20					TAR8 3K0A0,2S	10	TAR8 3K0A0,2	10	TAR8 3K0A0,5S	15

TAR12

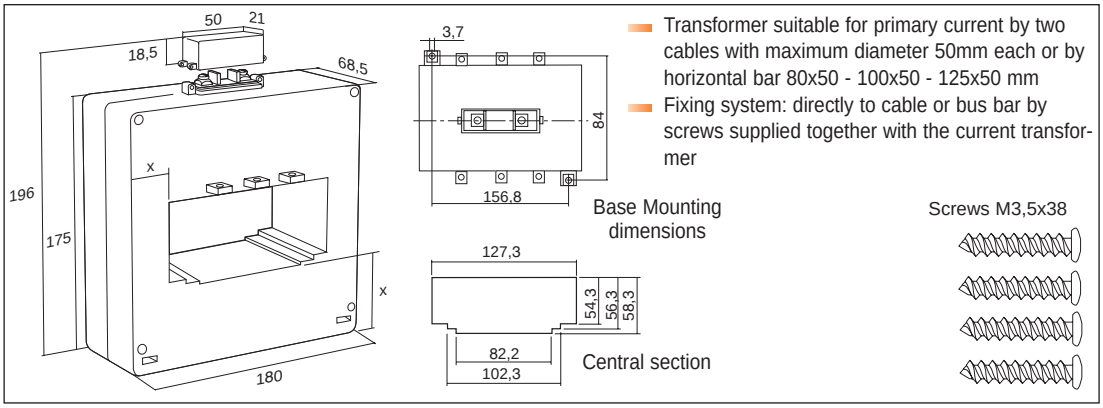

- Transformer suitable for primary current by two cables with maximum diameter 50mm each or by horizontal bar 80x50 - 100x50 - 125x50 mm
- Fixing system: directly to cable or bus bar by screws supplied together with the current transformer

A	kg	class 0,5		class 1		class 3		class 0,2S		class 0,2		class 0,5S	
primary current	weigth	secondary current 5A		secondary current 5A		secondary current 5A		secondary current 5A		secondary current 5A		secondary current 5A	
		code	VA	code	VA	code	VA	code	VA	code	VA	code	VA
500	1,5	TAR12 500A	10										
600		TAR12 600A	10										
750		TAR12 750A	10										
800		TAR12 800A	15										
1000		TAR12 1K0A	20										
1200		TAR12 1K2A	20										
1500		TAR12 1K5A	20					TAR12 1K5A0,2S	10	TAR12 1K5A0,2	10	TAR12 1K5A0,5S	20
1600		TAR12 1K6A	20					TAR12 1K6A0,2S	10	TAR12 1K6A0,2	10	TAR12 1K6A0,5S	25
2000	1,6	TAR12 2K0A	30					TAR12 2K0A0,2S	15	TAR12 2K0A0,2	15	TAR12 2K0A0,5S	30
2500		TAR12 2K5A	40					TAR12 2K5A0,2S	20	TAR12 2K5A0,2	20	TAR12 2K5A0,5S	35
3000		TAR12 3K0A	40					TAR12 3K0A0,2S	20	TAR12 3K0A0,2	20	TAR12 3K0A0,5S	40
4000	2	TAR12 4K0A	50					TAR12 4K0A0,2S	30	TAR12 4K0A0,2	30	TAR12 4K0A0,5S	50

TAR8V

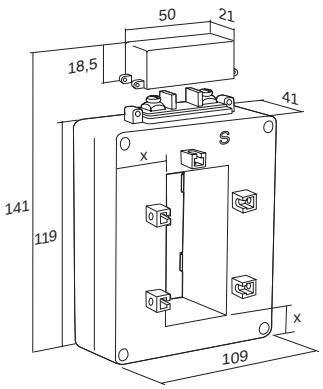

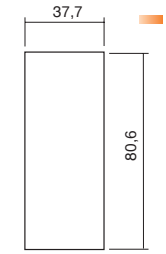

Central section

- Transformer suitable for primary current by two cables with maximum diameter 35mm each or by vertical bar 80x30 - 2x80x5 - 2x80x10 - 3x80x5 mm
- Fixing system: directly to cable or bus bar by bolts supplied together with the current transformer

n. 8 Nuts M4

n. 8 Bolts M4x40

A	kg	class 0,5		class 1		class 3	
primary current	weigth	secondary current 5A		secondary current 5A		secondary current 5A	
		code	VA	code	VA	code	VA
400	0,7	TAR8V 400A	6				
500		TAR8V 500A	10				
600		TAR8V 600A	10				
750		TAR8V 750A	10				
800		TAR8V 800A	10				
1000		TAR8V 1K0A	10				

A	kg	class 0,5		class 1		class 3	
primary current	weigth	secondary current 5A		secondary current 5A		secondary current 5A	
		code	VA	code	VA	code	VA
1200	0,7	TAR8V 1K2A	10				
1500		TAR8V 1K5A	10				
1600		TAR8V 1K6A	12				
2000		TAR8V 2K0A	20				
2500	0,8	TAR8V 2K5A	20				

TAR12V

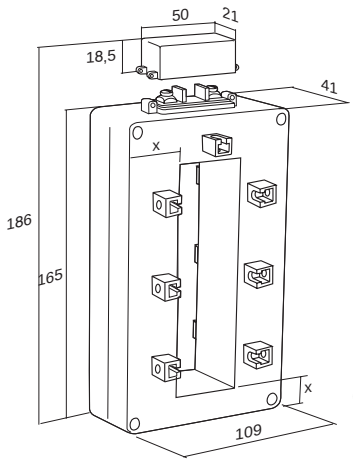

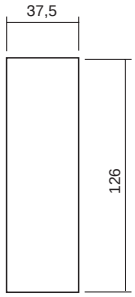

Central section

- Transformer suitable for primary current by three cables with maximum diameter 35mm each or by vertical bar 100x10 - 2x100x5 - 2x100x10 - 3x100x5 - 3x100x10 - 4x100x5 - 125x30 - 2x125x5 - 3x125x5 - 4x125x5 mm
- Fixing system: directly to cable or bus bar by bolts supplied together with the current transformer

n. 12 Nuts M4

n. 12 Bolts M4x40

A	kg	class 0,5		class 1		class 3	
primary current	weigth	secondary current 5A		secondary current 5A		secondary current 5A	
		code	VA	code	VA	code	VA
800	0,7	TAR12V 800A	10				
1000		TAR12V 1K0A	10				
1200		TAR12V 1K2A	10				
1500		TAR12V 1K5A	12				

A	kg	class 0,5		class 1		class 3	
primary current	weigth	secondary current 5A		secondary current 5A		secondary current 5A	
		code	VA	code	VA	code	VA
1600	1	TAR12V 1K6A	12				
2000		TAR12V 2K0A	15				
2500		TAR12V 2K5A	20				

STANDARD SERIES
PROTECTION CURRENT TRANSFORMERS

The C.T. when used as a current generator for protection relays has electrical characteristics which differ from those of the measuring transformer. Infact the measuring C.T. is expected to give a saturation of the magnetic circuit with 5P in primary currents while, in the case of protective C.T., it is necessary for the secondary current value to follow the increase in the primary current up to 10-15-20 In, so as to guarantee the intervention of the relay in the case of unforeseen breakdown current. It is important not to load the C.T. with a P performance which is greater than that indicated, so as not to modify the saturation value of the C.T.P=RI² where: P= load on the C.T. R= resistance of the relay + resistance of the cables I= nominal secondary current of the C.T.

- Sealable terminals cover included
- Different characteristics on request
- **Secondary current 1A on request**

TARPD1/P

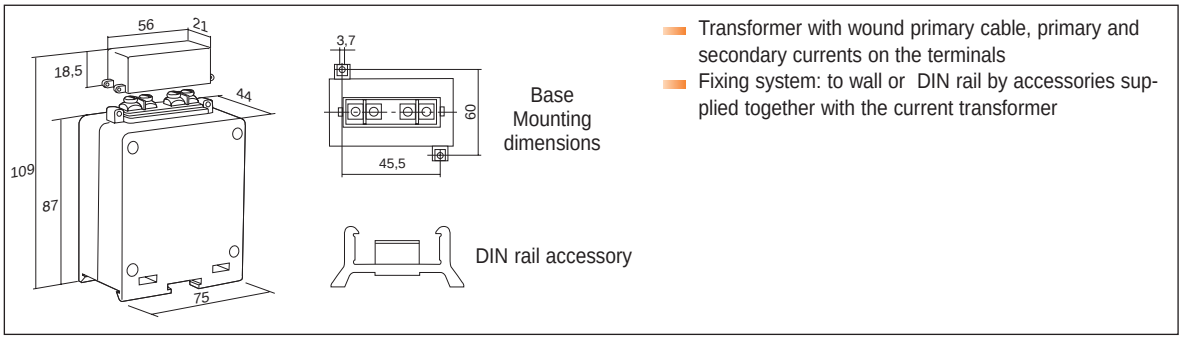

- Transformer with wound primary cable, primary and secondary currents on the terminals
- Fixing system: to wall or DIN rail by accessories supplied together with the current transformer

A primary current	kg weigth	class 5P5 secondary current 5A code	VA	class 5P10 secondary current 5A code	VA
5	0,5	TARPD1/P 5A 5P5	4	TARPD1/P 5A 5P10	2
10		TARPD1/P 10A 5P5	4	TARPD1/P 10A 5P10	2
15		TARPD1/P 15A 5P5	4	TARPD1/P 15A 5P10	2
20		TARPD1/P 20A 5P5	4	TARPD1/P 20A 5P10	2

A primary current	kg weigth	class 5P5 secondary current 5A code	VA	class 5P10 secondary current 5A code	VA
25	0,5	TARPD1/P 25A 5P5	4	TARPD1/P 25A 5P10	2
30		TARPD1/P 30A 5P5	4	TARPD1/P 30A 5P10	2
40		TARPD1/P 40A 5P5	4	TARPD1/P 40A 5P10	2

TARPD2/P

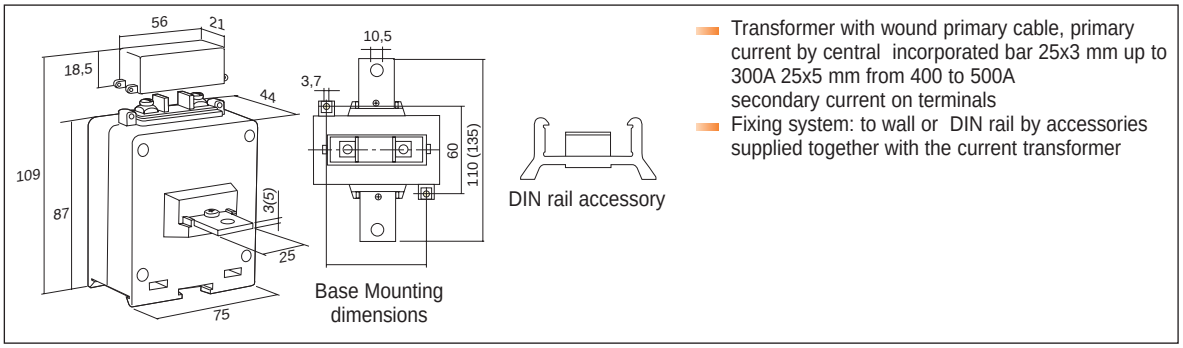

- Transformer with wound primary cable, primary current by central incorporated bar 25x3 mm up to 300A 25x5 mm from 400 to 500A secondary current on terminals
- Fixing system: to wall or DIN rail by accessories supplied together with the current transformer

A primary current	kg weigth	class 5P5 secondary current 5A code	VA	class 5P10 secondary current 5A code	VA
50	0,5	TARPD2/P 50A 5P5	4	TARPD2/P 50A 5P10	2
60		TARPD2/P 60A 5P5	4	TARPD2/P 60A 5P10	2
80		TARPD2/P 80A 5P5	4	TARPD2/P 80A 5P10	2
100		TARPD2/P 100A 5P5	4	TARPD2/P 100A 5P10	2
150		TARPD2/P 150A 5P5	4	TARPD2/P 150A 5P10	2

A primary current	kg weigth	class 5P5 secondary current 5A code	VA	class 5P10 secondary current 5A code	VA
200	0,5	TARPD2/P 200A 5P5	4	TARPD2/P 200A 5P10	2
250		TARPD2/P 250A 5P5	4	TARPD2/P 250A 5P10	2
300		TARPD2/P 300A 5P5	4	TARPD2/P 300A 5P10	2
400		TARPD2/P 400A 5P5	4	TARPD2/P 400A 5P10	2
500		TARPD2/P 500A 5P5	4	TARPD2/P 500A 5P10	2

TAR5/P

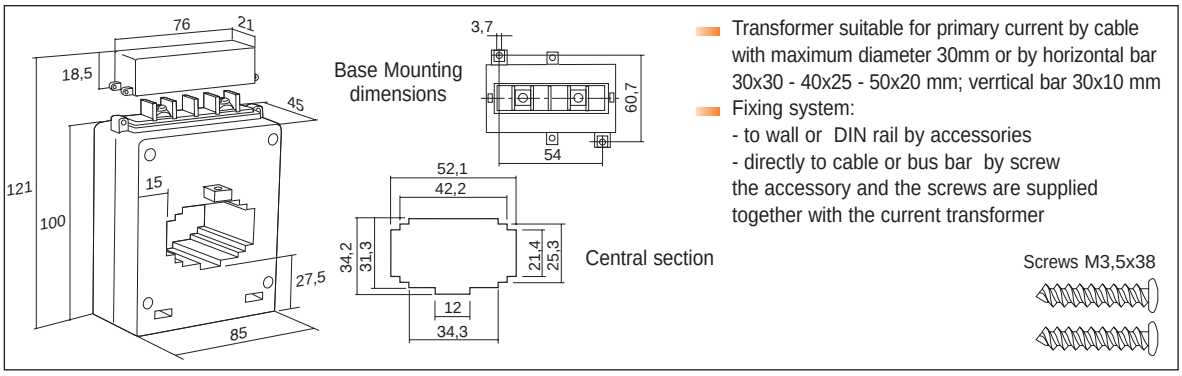

- Transformer suitable for primary current by cable with maximum diameter 30mm or by horizontal bar 30x30 - 40x25 - 50x20 mm; verrtical bar 30x10 mm
- Fixing system:
  - to wall or DIN rail by accessories
  - directly to cable or bus bar by screw
  the accessory and the screws are supplied together with the current transformer

A	kg	class 5P5		class 5P10	
primary current	weigth	secondary current 5A		secondary current 5A	
		code	VA	code	VA
250	0,6	TAR5/P 250A 5P5	4	TAR5/P 250A 5P10	2
300		TAR5/P 300A 5P5	4	TAR5/P 300A 5P10	2
400		TAR5/P 400A 5P5	4	TAR5/P 400A 5P10	2
500	0,5	TAR5/P 500A 5P5	4	TAR5/P 500A 5P10	2

A	kg	class 5P5		class 5P10	
primary current	weigth	secondary current 5A		secondary current 5A	
		code	VA	code	VA
600	0,5	TAR5/P 600A 5P5	4	TAR5/P 600A 5P10	2
800		TAR5/P 800A 5P5	4	TAR5/P 800A 5P10	2
1000	0,4	TAR5/P 1K0A 5P5	4	TAR5/P 1K0A 5P10	2

TAR6/P

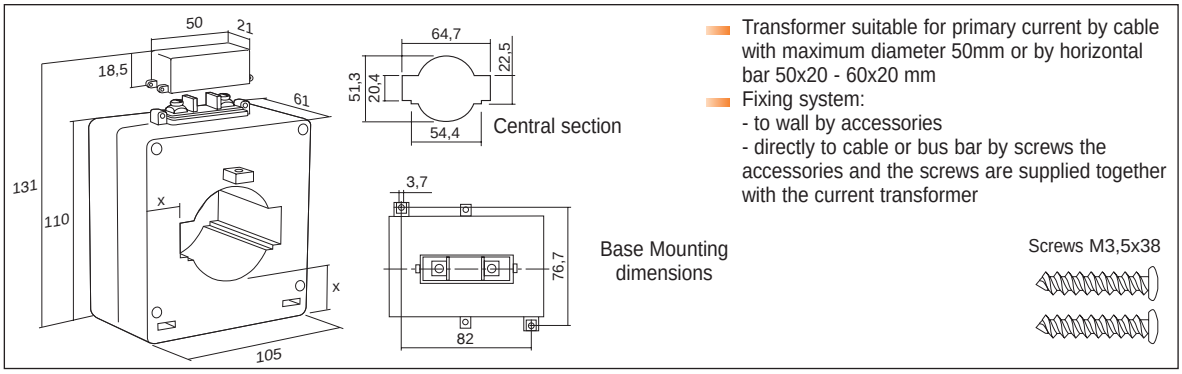

- Transformer suitable for primary current by cable with maximum diameter 50mm or by horizontal bar 50x20 - 60x20 mm
- Fixing system:
  - to wall by accessories
  - directly to cable or bus bar by screws the accessories and the screws are supplied together with the current transformer

A	kg	class 5P5		class 5P10	
primary current	weigth	secondary current 5A		secondary current 5A	
		code	VA	code	VA
250	1	TAR6/P 250A 5P5	5	TAR6/P 250A 5P10	2
300		TAR6/P 300A 5P5	5	TAR6/P 300A 5P10	3
400		TAR6/P 400A 5P5	8	TAR6/P 400A 5P10	4
500		TAR6/P 500A 5P5	8	TAR6/P 500A 5P10	4
600	0,7	TAR6/P 600A 5P5	8	TAR6/P 600A 5P10	4

A	kg	class 5P5		class 5P10	
primary current	weigth	secondary current 5A		secondary current 5A	
		code	VA	code	VA
800	0,7	TAR6/P 800A 5P5	15	TAR6/P 800A 5P10	5
1000		TAR6/P 1K0A 5P5	20	TAR6/P 1K0A 5P10	6
1200	0,6	TAR6/P 1K2A 5P5	20	TAR6/P 1K2A 5P10	6
1500		TAR6/P 1K5A 5P5	30	TAR6/P 1K5A 5P10	10

TAR8/P

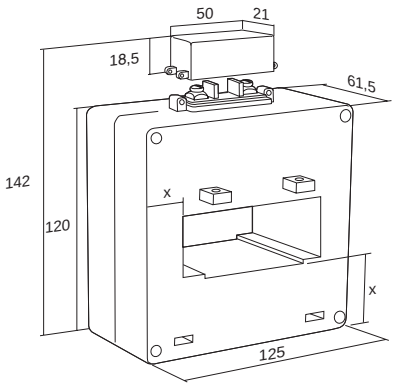

- Transformer suitable for primary current by two cables with maximum diameter 30mm each or by horizontal bar 60x30 - 80x30 mm
- Fixing system: directly to cable or bus bar by screws supplied together with the current transformer

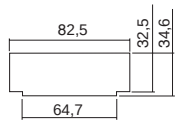

Central section

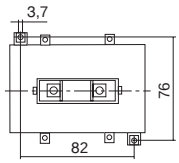

Base Mounting dimensions

Screws M3,5x38

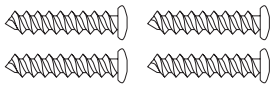

A	kg	class 5P5		class 5P10		class 5P15		class 5P20	
primary current	weigth	secondary current 5A		secondary current 5A		secondary current 5A		secondary current 5A	
		code	VA	code	VA	code	VA	code	VA
300	0,7	TAR8/P 300A 5P5	5	TAR8/P 300A 5P10	3	TAR8/P 300A 5P15	1,5	TAR8/P 300A 5P20	1
400		TAR8/P 400A 5P5	6	TAR8/P 400A 5P10	3	TAR8/P 400A 5P15	1,5	TAR8/P 400A 5P20	1
500	0,9	TAR8/P 500A 5P5	15	TAR8/P 500A 5P10	4	TAR8/P 500A 5P15	4	TAR8/P 500A 5P20	2
600		TAR8/P 600A 5P5	20	TAR8/P 600A 5P10	5	TAR8/P 600A 5P15	4	TAR8/P 600A 5P20	2
800		TAR8/P 800A 5P5	20	TAR8/P 800A 5P10	5	TAR8/P 800A 5P15	6	TAR8/P 800A 5P20	3
1000	0,7	TAR8/P 1K0A 5P5	20	TAR8/P 1K0A 5P10	5	TAR8/P 1K0A 5P15	5	TAR8/P 1K0A 5P20	2
1200		TAR8/P 1K2A 5P5	30	TAR8/P 1K2A 5P10	6	TAR8/P 1K2A 5P15	6	TAR8/P 1K2A 5P20	3
1500	1	TAR8/P 1K5A 5P5	20	TAR8/P 1K5A 5P10	6	TAR8/P 1K5A 5P15	2	TAR8/P 1K5A 5P20	1
2000		TAR8/P 2K0A 5P5	12	TAR8/P 2K0A 5P10	6	TAR8/P 2K0A 5P15	5	TAR8/P 2K0A 5P20	3
2500	1,2	TAR8/P 2K5A 5P5	15	TAR8/P 2K5A 5P10	8	TAR8/P 2K5A 5P15	6	TAR8/P 2K5A 5P20	4

TAR12/P

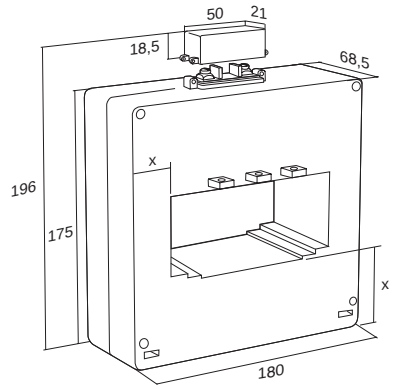

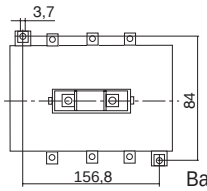

Base Mounting dimensions

- Transformer suitable for primary current by two cables with maximum diameter 50mm each or by horizontal bar 80x50 - 100x50 - 125x50 mm
- Fixing system: directly to cable or bus bar by screws supplied together with the current transformer

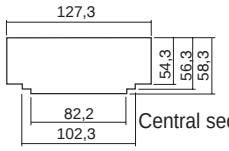

Central section

Screws M3,5x38

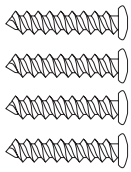

A	kg	class 5P5		class 5P10		class 5P15		class 5P20	
primary current	weigth	secondary current 5A		secondary current 5A		secondary current 5A		secondary current 5A	
		code	VA	code	VA	code	VA	code	VA
400	1,4	TAR12/P 400A 5P5	8	TAR12/P 400A 5P10	4	TAR12/P 400A 5P15	3	TAR12/P 400A 5P20	2
500		TAR12/P 500A 5P5	8	TAR12/P 500A 5P10	4	TAR12/P 500A 5P15	3	TAR12/P 500A 5P20	2
600		TAR12/P 600A 5P5	8	TAR12/P 600A 5P10	4	TAR12/P 600A 5P15	3	TAR12/P 600A 5P20	2
800		TAR12/P 800A 5P5	12	TAR12/P 800A 5P10	6	TAR12/P 800A 5P15	4	TAR12/P 800A 5P20	3
1000	1,45	TAR12/P 1K0A 5P5	15	TAR12/P 1K0A 5P10	8	TAR12/P 1K0A 5P15	6	TAR12/P 1K0A 5P20	4
1200		TAR12/P 1K2A 5P5	20	TAR12/P 1K2A 5P10	10	TAR12/P 1K2A 5P15	6	TAR12/P 1K2A 5P20	5
1500		TAR12/P 1K5A 5P5	20	TAR12/P 1K5A 5P10	10	TAR12/P 1K5A 5P15	6	TAR12/P 1K5A 5P20	5
2000		TAR12/P 2K0A 5P5	25	TAR12/P 2K0A 5P10	12	TAR12/P 2K0A 5P15	8	TAR12/P 2K0A 5P20	6
2500	1,6	TAR12/P 2K5A 5P5	30	TAR12/P 2K5A 5P10	15	TAR12/P 2K5A 5P15	10	TAR12/P 2K5A 5P20	8
3000		TAR12/P 3K0A 5P5	40	TAR12/P 3K0A 5P10	20	TAR12/P 3K0A 5P15	15	TAR12/P 3K0A 5P20	10
4000	2	TAR12/P 4K0A 5P5	50	TAR12/P 4K0A 5P10	25	TAR12/P 4K0A 5P15	15	TAR12/P 4K0A 5P20	12

STANDARD SERIES - DUAL RATIO CURRENT TRANSFORMERS

- Dual ratio on secondary: S1-S2 low value, S1-S3 high value
- Different characteristics on request
- Sealable terminals cover included
- **Secondary current 1A on request**

TARPD2/2

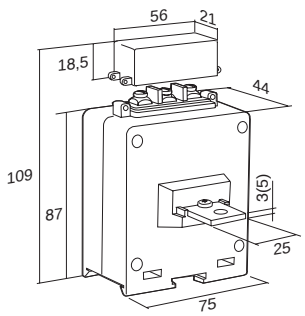

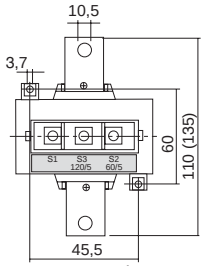

Base Mounting dimensions

- Transformer with wound primary cable, primary current by central incorporated bar 25x3 mm up to 300A
  25x5 mm from 400 to 500A
  secondary current on terminals
- Fixing system: to wall or to DIN rail by accessories supplied together with the current transformer

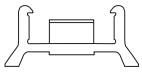

DIN rail accessory

A primary current	kg weigth	class 0,5 secondary current 5A code	VA
5-10	0,6	TARPD2/2 5-10A	5-15
10-20		TARPD2/2 10-20A	5-15
15-30		TARPD2/2 15-30A	5-15
20-40		TARPD2/2 20-40A	5-15
25-50		TARPD2/2 25-50A	5-15
30-60		TARPD2/2 30-60A	5-15
40-80		TARPD2/2 40-80A	5-15

A primary current	kg weigth	class 0,5 secondary current 5A code	VA
50-100	0,6	TARPD2/2 50-100A	5-15
60-120		TARPD2/2 60-120A	5-15
80-160		TARPD2/2 80-160A	5-15
100-200		TARPD2/2 100-200A	5-15
150-300		TARPD2/2 150-300A	5-15
200-400		TARPD2/2 200-400A	5-15
250-500		TARPD2/2 250-500A	5-15

TAR1D/2

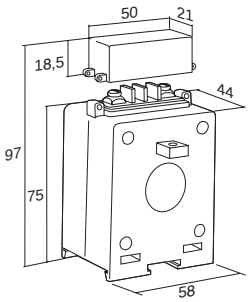

Central section

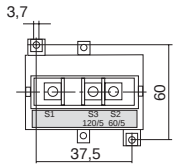

Base Mounting dimensions

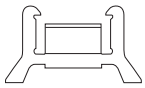

DIN rail accessory

- Transformer suitable for primary current by cable with maximum diameter 20mm
- Fixing system: - to wall or DIN rail by accessories
  - directly to cable by the accessories
  and the screws are supplied together with the current transformer

Screws M3,5x38

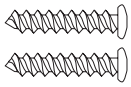

A primary current	kg weigth	class 0,5 secondary current 5A code	VA	class 1 secondary current 5A code	VA	class 3 secondary current 5A code	VA
40-80	0,3					TAR1D/2 40-80A	3-3
50-100						TAR1D/2 50-100A	3-3
60-120						TAR1D/2 60-120A	3-3
80-160						TAR1D/2 80-160A	3-3

A primary current	kg weigth	class 0,5 secondary current 5A code	VA	class 1 secondary current 5A code	VA	class 3 secondary current 5A code	VA
100-200	0,3			TAR1D/2 100-200A	3-6		
150-300		TAR1D/2 150-300A	3-6				
200-400		TAR1D/2 200-400A	3-6				
250-500		TAR1D/2 250-500A	5-10				

TAR3D/2

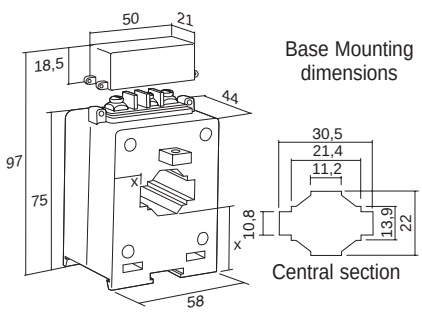

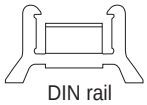

DIN rail accessory

- Transformer suitable for primary current by cable with maximum diameter 21mm or by horizontal bar 20x10 - 30x10 mm; verrtical bar 20x10 mm
- Fixing system: - to wall or to DIN rail by accessories
  - directly to cable or bus bar by screws

the accessories and the screws are supplied together with the current transformer

Screws M3,5x31

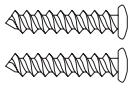

A	kg	class 0,5		class 1		class 3	
primary current	weigth	secondary current 5A		secondary current 5A		secondary current 5A	
		code	VA	code	VA	code	VA
100-200 150-300 200-400	0,3	TAR3D/2 150-300A TAR3D/2 200-400A	3-6 3-6	TAR3D/2 100-200A	3-6		

A	kg	class 0,5		class 1		class 3	
primary current	weigth	secondary current 5A		secondary current 5A		secondary current 5A	
		code	VA	code	VA	code	VA
250-500 300-600	0,3	TAR3D/2 250-500A TAR3D/2 300-600A	5-10 5-10				

TAR4D/2

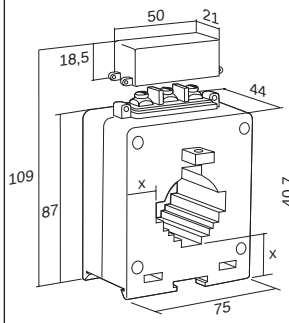

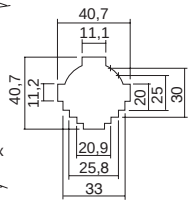

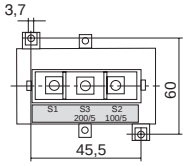

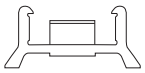

DIN rail accessory

- Transformer suitable for primary current by cable with maximum diameter 32mm or by horizontal bar 25x20 - 30x25 - 40x10; verrtical bar 20x25 - 30x20 - 40x10 mm
- Fixing system:
  - to wall or DIN rail by accessories
  - directly to cable or bus bar by screws

the accessory and the screws are supplied together with the current transformer

Screws M3,5x38

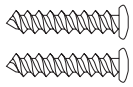

A	kg	class 0,5		class 1		class 3	
primary current	weigth	secondary current 5A		secondary current 5A		secondary current 5A	
		code	VA	code	VA	code	VA
100-200 150-300 200-400	0,5	TAR4D/2 200-400A	4-8	TAR4D/2 100-200A TAR4D/2 150-300A	3-6 3-6		

A	kg	class 0,5		class 1		class 3	
primary current	weigth	secondary current 5A		secondary current 5A		secondary current 5A	
		code	VA	code	VA	code	VA
250-500 300-600 400-800	0,5	TAR4D/2 250-500A TAR4D/2 300-600A TAR4D/2 400-800A	6-10 6-10 6-10				

TAR5/2

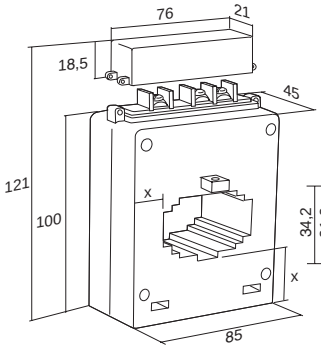

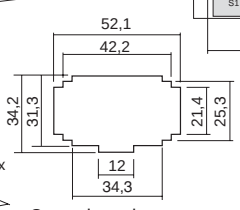

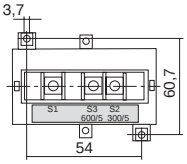

- Transformer suitable for primary current by cable with maximum diameter 30mm or by horizontal bar 30x30 - 40x25 - 50x20 mm; verrtical bar 30x10 mm
- Fixing system:
  - to wall or by accessories
  - directly to cable or bus bar by screws

the accessory and the screws are supplied together with the current transformer

Screws M3,5x38

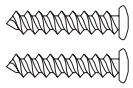

A	kg	class 0,5		class 1		class 3	
primary current	weigth	secondary current 5A		secondary current 5A		secondary current 5A	
		code	VA	code	VA	code	VA
200-400 250-500 300-600	0,6	TAR5/2 250-500A TAR5/2 300-600A	4-6 4-8	TAR5/2 200-400A	4-6		

A	kg	class 0,5		class 1		class 3	
primary current	weigth	secondary current 5A		secondary current 5A		secondary current 5A	
		code	VA	code	VA	code	VA
400-800 500-1000	0,4	TAR5/2 400-800A TAR5/2 500-1K0A	6-10 6-10				

TAR6/2

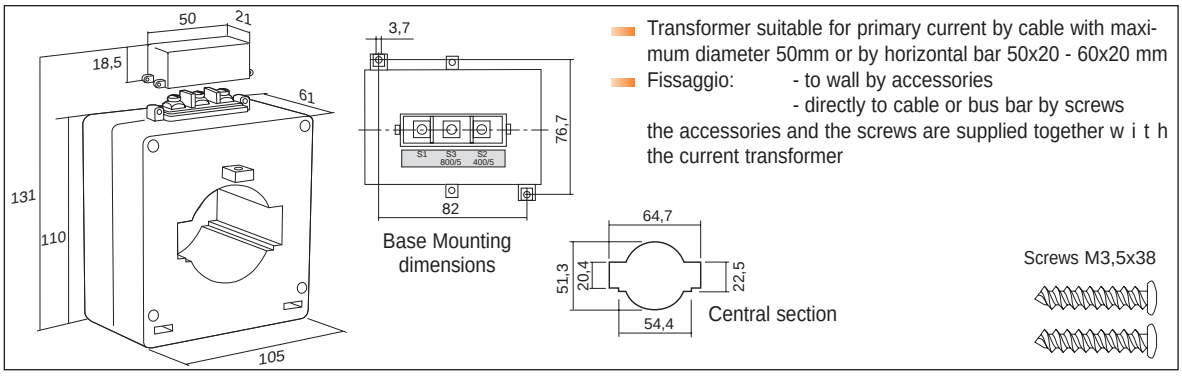

- Transformer suitable for primary current by cable with maximum diameter 50mm or by horizontal bar 50x20 - 60x20 mm
- Fissaggio: - to wall by accessories
  - directly to cable or bus bar by screws

  the accessories and the screws are supplied together w i t h the current transformer

A	kg	class 0,5		class 1		class 3	
primary current	weigth	secondary current 5A		secondary current 5A		secondary current 5A	
		code	VA	code	VA	code	VA
250-500	1,3	TAR6/2 250-500A	5-10				
300-600		TAR6/2 300-600A	5-10				
400-800		TAR6/2 400-800A	6-12				
500-1000		TAR6/2 500-1K0A	10-20				

A	kg	class 0,5		class 1		class 3	
primary current	weigth	secondary current 5A		secondary current 5A		secondary current 5A	
		code	VA	code	VA	code	VA
600-1200	1	TAR6/2 600-1K2A	10-20				
800-1600		TAR6/2 800-1K6A	10-20				
1000-2000		TAR6/2 1K0-2K0A	10-20				

TAR8/2

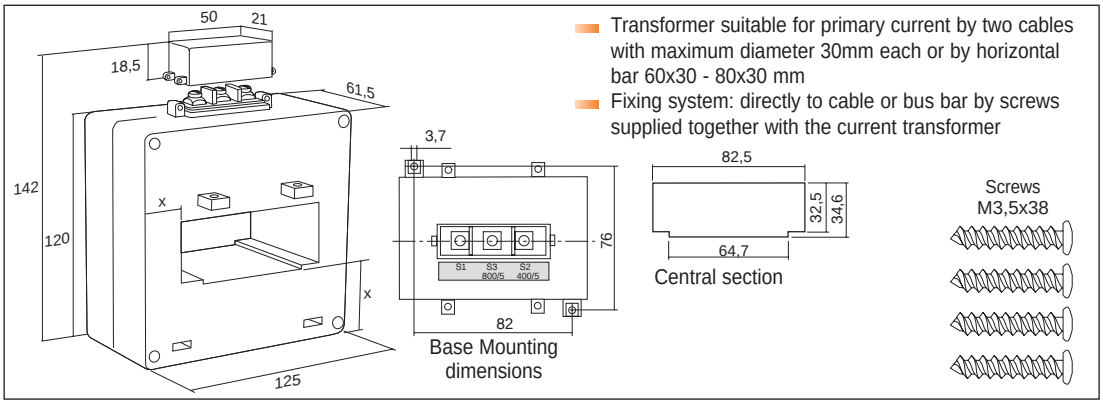

- Transformer suitable for primary current by two cables with maximum diameter 30mm each or by horizontal bar 60x30 - 80x30 mm
- Fixing system: directly to cable or bus bar by screws supplied together with the current transformer

A	kg	class 0,5		class 1		class 3	
primary current	weigth	secondary current 5A		secondary current 5A		secondary current 5A	
		code	VA	code	VA	code	VA
400-800	1,2	TAR8/2 400-800A	6-12				
500-1000		TAR8/2 500-1K0A	10-20				
600-1200		TAR8/2 600-1K2A	10-20				
800-1600		TAR8/2 800-1K6A	10-20				

A	kg	class 0,5		class 1		class 3	
primary current	weigth	secondary current 5A		secondary current 5A		secondary current 5A	
		code	VA	code	VA	code	VA
1000-2000	1,2	TAR8/2 1K0-2K0A	10-20				
1200-2400		TAR8/2 1K2-2K4A	15-30				
1500-3000	1,5	TAR8/2 1K5-3K0A	20-40				

TAR12/2

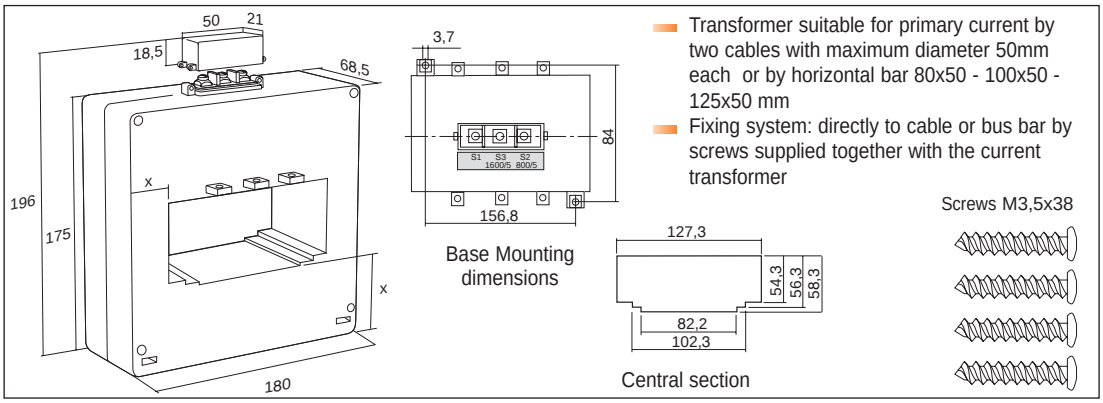

- Transformer suitable for primary current by two cables with maximum diameter 50mm each or by horizontal bar 80x50 - 100x50 - 125x50 mm
- Fixing system: directly to cable or bus bar by screws supplied together with the current transformer

A	kg	class 0,5		class 1		class 3	
primary current	weigth	secondary current 5A		secondary current 5A		secondary current 5A	
		code	VA	code	VA	code	VA
800-1600	1,5	TAR12/2 800-1K6A	15-30				
1000-2000		TAR12/2 1K0-2K0A	20-40				
1200-2400		TAR12/2 1K2-2K4A	20-40				

A	kg	class 0,5		class 1		class 3	
primary current	weigth	secondary current 5A		secondary current 5A		secondary current 5A	
		code	VA	code	VA	code	VA
1500-3000	2	TAR12/2 1K5-3K0A	20-40				
2000-4000		TAR12/2 2K0-4K0A	30-60				

STANDARD SERIES - 4/20 mA DC OUTPUT CURRENT TRANSFORMERS

- Auxiliary power supply 20.....30VDC
- Resistive load 500 ohm max at 24VDC
- Testing voltage: 0,72kV/3kV
- Frequency 50Hz
- Sealable terminals cover included
- Different characteristics on request

CONNECTION DIAGRAM FOR TMAPD1

Auxiliary power supply 20.....30VDC

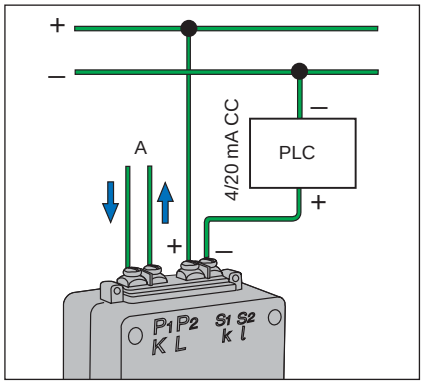

CONNECTION DIAGRAM FOR OTHER TMA...

Auxiliary power supply 20.....30VDC

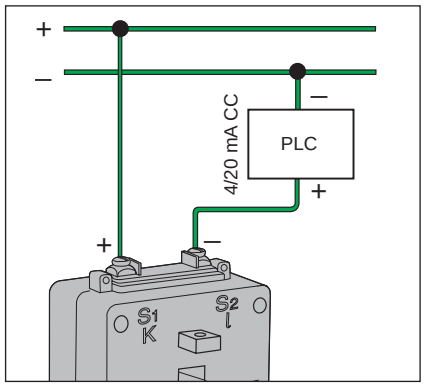

TMAPD1

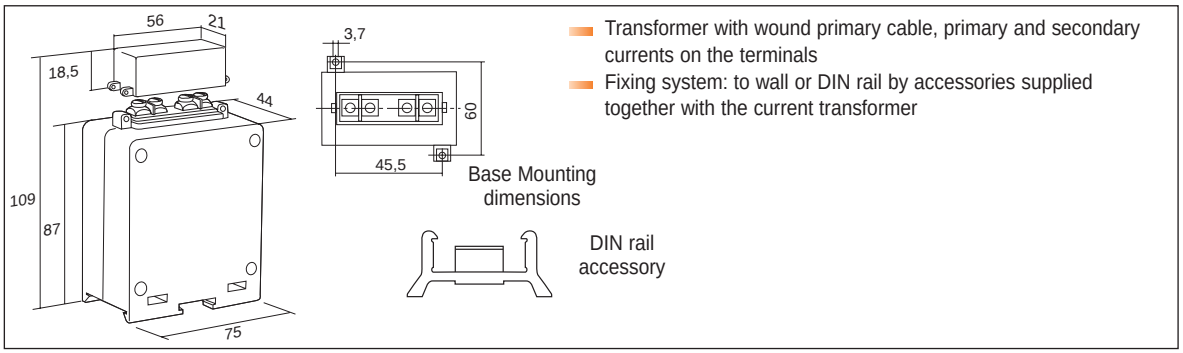

- Transformer with wound primary cable, primary and secondary currents on the terminals
- Fixing system: to wall or DIN rail by accessories supplied together with the current transformer

A primary current	kg weigth	class 1 secondary current 4/20mA code
1 5 10 15	0,5	TMAPD1-1/4-20MA TMAPD1-5/4-20MA TMAPD1-10/4-20MA TMAPD1-15/4-20MA

A primary current	kg weigth	class 1 secondary current 4/20mA code
20 25 40	0,5	TMAPD1-20/4-20MA TMAPD1-25/4-20MA TMAPD1-40/4-20MA

TMAPD2

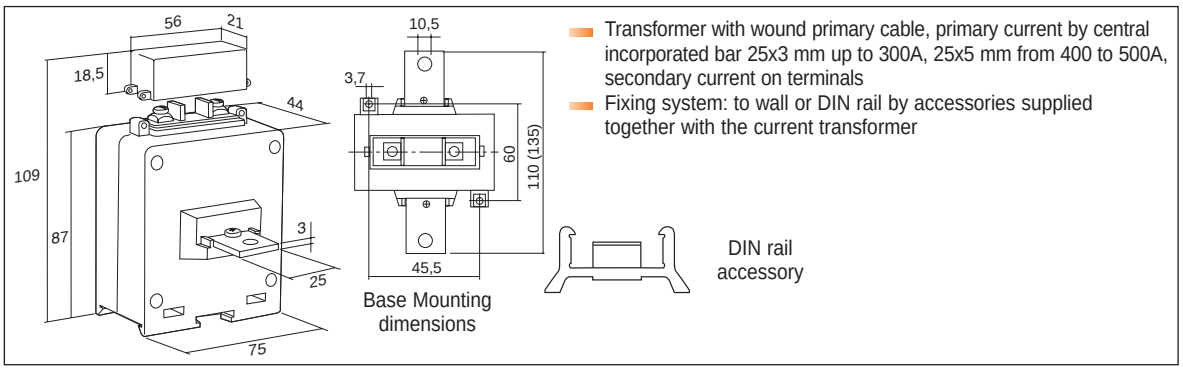

- Transformer with wound primary cable, primary current by central incorporated bar 25x3 mm up to 300A, 25x5 mm from 400 to 500A, secondary current on terminals
- Fixing system: to wall or DIN rail by accessories supplied together with the current transformer

A primary current	kg weigth	class 1 secondary current 4/20mA code
50 60	0,5	TMAPD2-50/4-20MA TMAPD2-60/4-20MA

A primary current	kg weigth	class 1 secondary current 4/20mA code
80	0,5	TMAPD2-80/4-20MA

TMA4D3

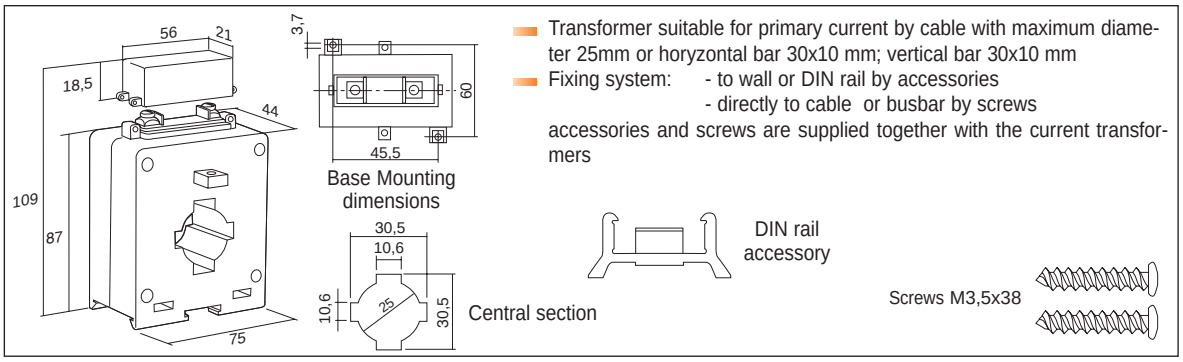

- Transformer suitable for primary current by cable with maximum diameter 25mm or horyzontal bar 30x10 mm; vertical bar 30x10 mm
- Fixing system: - to wall or DIN rail by accessories
  - directly to cable or busbar by screws

accessories and screws are supplied together with the current transformers

A primary current	kg weigth	class 1 secondary current 4/20mA code
50	0,7	TMA4D3-50/4-20MA
60		TMA4D3-60/4-20MA
80		TMA4D3-80/4-20MA
100		TMA4D3-100/4-20MA
150		TMA4D3-150/4-20MA

A primary current	kg weigth	class 1 secondary current 4/20mA code
200	0,7	TMA4D3-200/4-20MA
250		TMA4D3-250/4-20MA
300		TMA4D3-300/4-20MA
400		TMA4D3-400/4-20MA
500		TMA4D3-500/4-20MA

TMA5

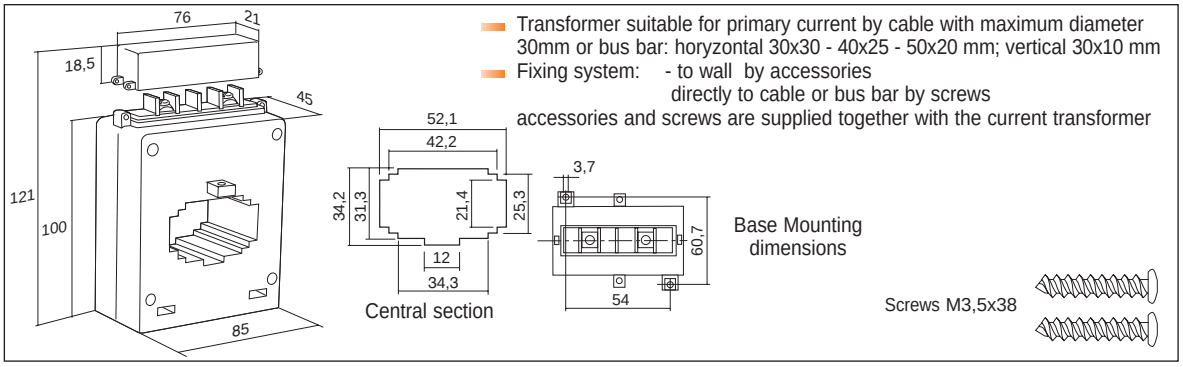

- Transformer suitable for primary current by cable with maximum diameter 30mm or bus bar: horyzontal 30x30 - 40x25 - 50x20 mm; vertical 30x10 mm
- Fixing system: - to wall by accessories
  - directly to cable or bus bar by screws

accessories and screws are supplied together with the current transformer

A primary current	kg weigth	class 1 secondary current 4/20mA code
100	0,5	TMA5-100/4-20MA
150		TMA5-150/4-20MA
200		TMA5-200/4-20MA
250		TMA5-250/4-20MA
300		TMA5-300/4-20MA
400		TMA5-400/4-20MA

A primary current	kg weigth	class 1 secondary current 4/20mA code
500	0,5	TMA5-500/4-20MA
600		TMA5-600/4-20MA
800		TMA5-800/4-20MA
1000	0,4	TMA5-1K0/4-20MA
1200		TMA5-1K2/4-20MA
1500		TMA5-1K5/4-20MA

TMA6

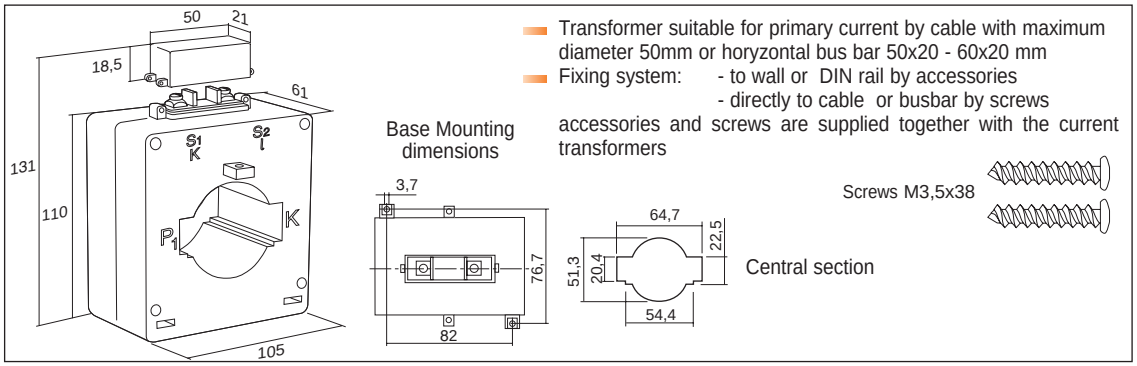

- Transformer suitable for primary current by cable with maximum diameter 50mm or horyzontal bus bar 50x20 - 60x20 mm
- Fixing system: - to wall or DIN rail by accessories
  - directly to cable or busbar by screws

accessories and screws are supplied together with the current transformers

A primary current	kg weigth	class 1 secondary current 4/20mA code
250	1	TMA6-250/4-20MA
300		TMA6-300/4-20MA
400		TMA6-400/4-20MA
500		TMA6-500/4-20MA
600	0,7	TMA6-600/4-20MA
800		TMA6-800/4-20MA

A primary current	kg weigth	class 1 secondary current 4/20mA code
1000	0,7	TMA6-1K0/4-20MA
1200		TMA6-1K2/4-20MA
1500	0,8	TMA6-1K5/4-20MA
2000		TMA6-2K0/4-20MA
2500	1	TMA6-2K5/4-20MA

TMA8

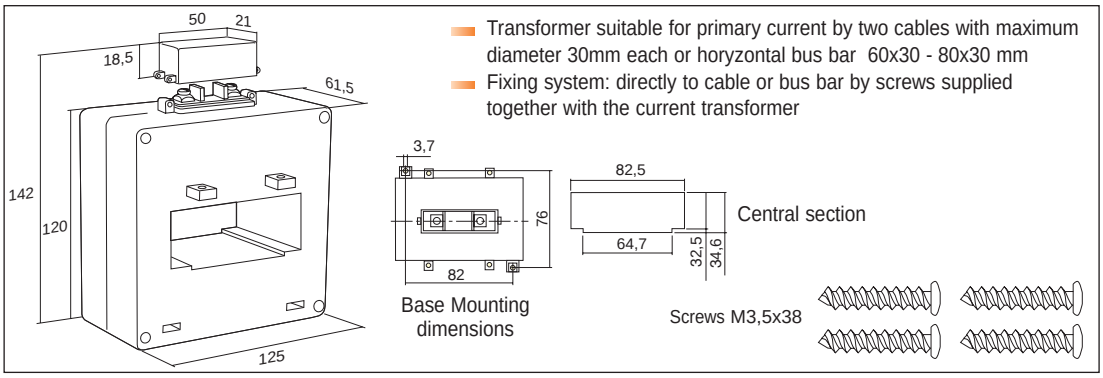

- Transformer suitable for primary current by two cables with maximum diameter 30mm each or horyzontal bus bar 60x30 - 80x30 mm
- Fixing system: directly to cable or bus bar by screws supplied together with the current transformer

A primary current	kg weigth	class 1 secondary current 4/20mA code
400	0,8	TMA8-400/4-20MA
500	1	TMA8-500/4-20MA
600		TMA8-600/4-20MA
800	0,7	TMA8-800/4-20MA
1000		TMA8-1K0/4-20MA

A primary current	kg weigth	class 1 secondary current 4/20mA code
1200	0,7	TMA8-1K2/4-20MA
1500	1	TMA8-1K5/4-20MA
2000		TMA8-2K0/4-20MA
2500		TMA8-2K5/4-20MA
3000	1,5	TMA8-3K0/4-20MA

TMA12

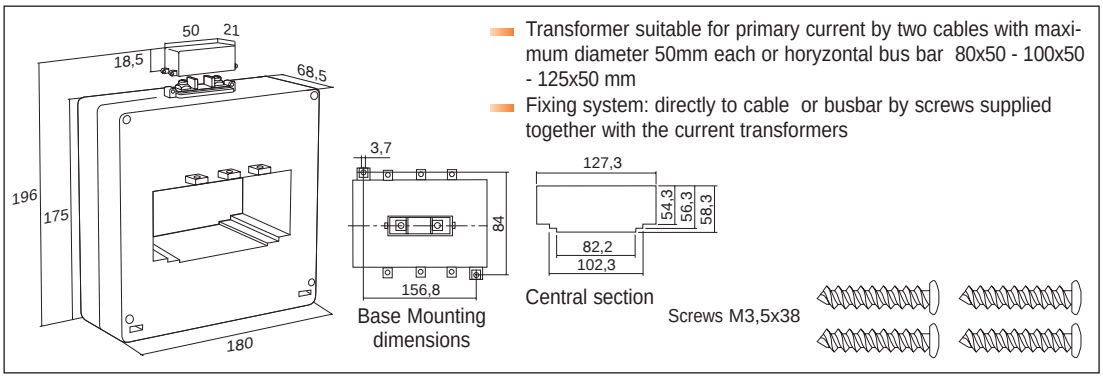

- Transformer suitable for primary current by two cables with maximum diameter 50mm each or horyzontal bus bar 80x50 - 100x50 - 125x50 mm
- Fixing system: directly to cable or busbar by screws supplied together with the current transformers

A primary current	kg weigth	class 1 secondary current 4/20mA code
400	1,5	TMA12-400/4-20MA
500		TMA12-500/4-20MA
600		TMA12-600/4-20MA
800		TMA12-800/4-20MA
1000		TMA12-1K0/4-20MA
1200		TMA12-1K2/4-20MA

A primary current	kg weigth	class 1 secondary current 4/20mA code
1500	1,5	TMA12-1K5/4-20MA
2000		TMA12-2K0/4-20MA
2500	1,6	TMA12-2K5/4-20MA
3000		TMA12-3K0/4-20MA
4000	2	TMA12-4K0/4-20MA

STANDARD SERIES - 0-20 mADC AND 0-10VDC OUTPUT CURRENT TRANSFORMERS

- Resistive load 500 ohm max for model 20mA
- Resistive load > 10 kohm for model 10V
- Testing voltage: 0,72kV/3kV
- Frequency 50Hz
- Sealable terminals cover included
- Different characteristics on request

SCHEMA COLLEGAMENTO TMAPD1

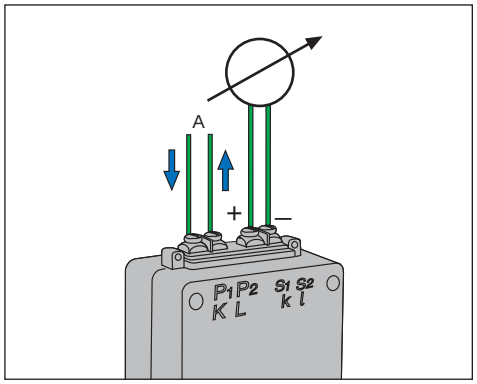

SCHEMA DI COLLEGAMENTO PER ALTRI TMA...

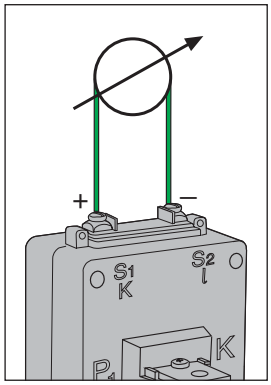

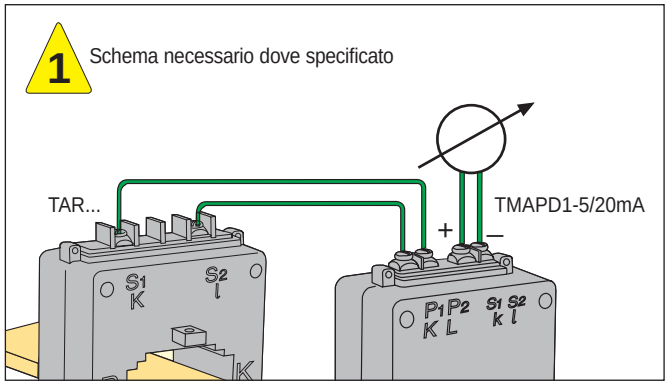

TMAPD1

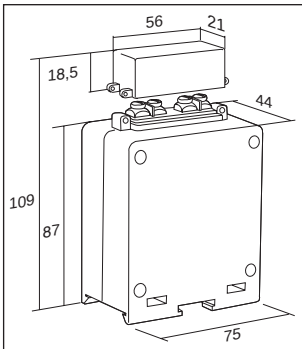

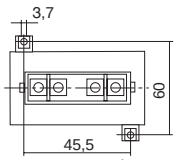

Base Mounting dimensions

DIN rail accessory

- Transformer with wound primary cable, primary and secondary currents on the terminals
- Fixing system: to wall or DIN rail by accessories supplied together with the current transformer

Screws M3,5x38

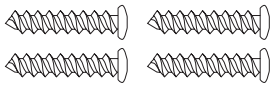

A	kg	class 1	
primary current	weigth	secondary output 20mA	secondary output 10V
		code	code
1 5 10 15	0,5	TMAPD1-1/20MA TMAPD1-5/20MA TMAPD1-10/20MA TMAPD1-15/20MA	TMAPD1-1/10V TMAPD1-5/10V TMAPD1-10/10V TMAPD1-15/10V

A	kg	class 1	
primary current	weigth	secondary output 20mA	secondary output 10V
		code	code
20 25 40	0,5	TMAPD1-20/20MA TMAPD1-25/20MA TMAPD1-40/20MA	TMAPD1-20/10V TMAPD1-25/10V TMAPD1-40/10V

TMAPD2

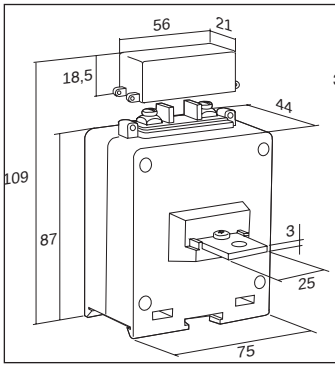

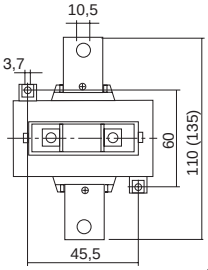

Base Mounting dimensions

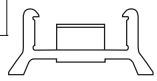

DIN rail accessory

- Transformer with wound primary cable, primary current from incorporated central bar. Secondary current on terminals
- Fixing system: to wall or DIN rail by accessories supplied together with the current transformer

A	kg	class 1	
primary current	weigth	secondary output 20mA	secondary output 10V
		code	code
50 60	0,5	TMAPD2-50/20MA TMAPD2-60/20MA	TMAPD2-50/10V TMAPD2-60/10V

A	kg	class 1	
primary current	weigth	secondary output 20mA	secondary output 10V
		code	code
80	0,5	TMAPD2-80/20MA	TMAPD2-80/10V

TMA4D3

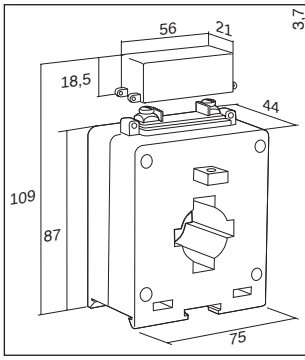

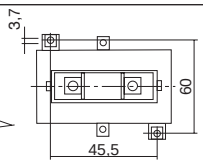

Base Mounting dimensions

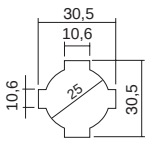

- Transformer suitable for primary current by cable with maximum diameter 25mm or horyzontal bar 30x10 mm; vertical bar 30x10 mm
- Fixing system: - to wall or DIN rail by accessories
  - directly to cable or busbar by screws

accessories and screws are supplied together with the current transformers

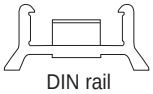

DIN rail accessory

Screws M3,5x38

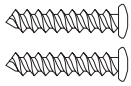

A	kg	class 1	
primary current	weigth	secondary output 20mA	secondary output 10V
		code	code
50 60 80 100	0,7	TMA4D3-50/20MA TMA4D3-60/20MA TMA4D3-80/20MA TMA4D3-100/20MA	TMA4D3-50/10V TMA4D3-60/10V TMA4D3-80/10V TMA4D3-100/10V

A	kg	class 1	
primary current	weigth	secondary output 20mA	secondary output 10V
		code	code
150 200 250 300 400 500	0,7	1 For these currents use the correspondent model TAR4D3 secondary 5A (example TAR4D3 200) in connection with the external accessory TMAPD1-5/20MA	TMA4D3-150/10V TMA4D3-200/10V TMA4D3-250/10V TMA4D3-300/10V TMA4D3-400/10V TMA4D3-500/10V

TMA5

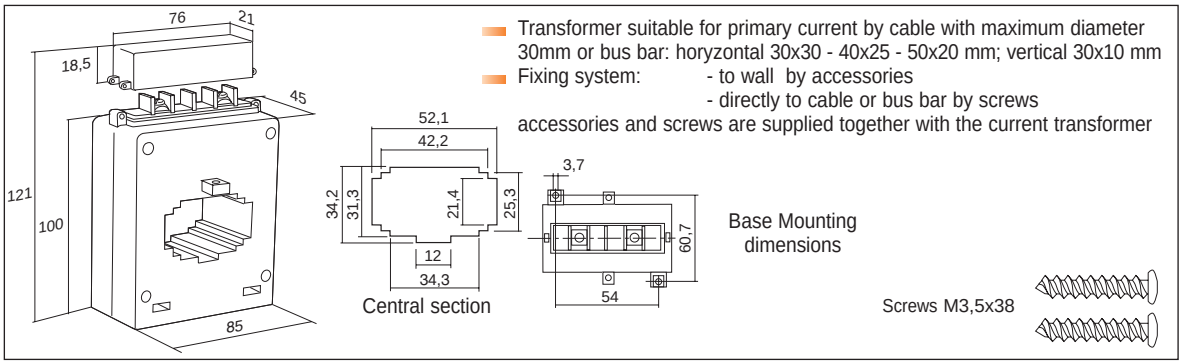

- Transformer suitable for primary current by cable with maximum diameter 30mm or bus bar: horyzontal 30x30 - 40x25 - 50x20 mm; vertical 30x10 mm
- Fixing system: - to wall by accessories
  - directly to cable or bus bar by screws

accessories and screws are supplied together with the current transformer

A primary current	kg weigth	class 1 secondary output 20mA code	class 1 secondary output 10V code
100	0,5	TMA5-100/20MA	TMA5-100/10V
150		For these currents use the correspondent model TAR5 secondary 5A (example TAR5 600) in connection with the external accessory TMAPD1-5/20MA	TMA5-150/10V
200			TMA5-200/10V
250			TMA5-250/10V
300			TMA5-300/10V
400			TMA5-400/10V

A primary current	kg weigth	class 1 secondary output 20mA code	class 1 secondary output 10V code
500	0,5	For these currents use the correspondent model TAR5 secondary 5A (example TAR5 600) in connection with the external accessory TMAPD1-5/20MA	TMA5-500/10V
600			TMA5-600/10V
800			TMA5-800/10V
1000	0,4		TMA5-1K0/10V
1200			TMA5-1K2/10V
1500			TMA5-1K5/10V

TMA6

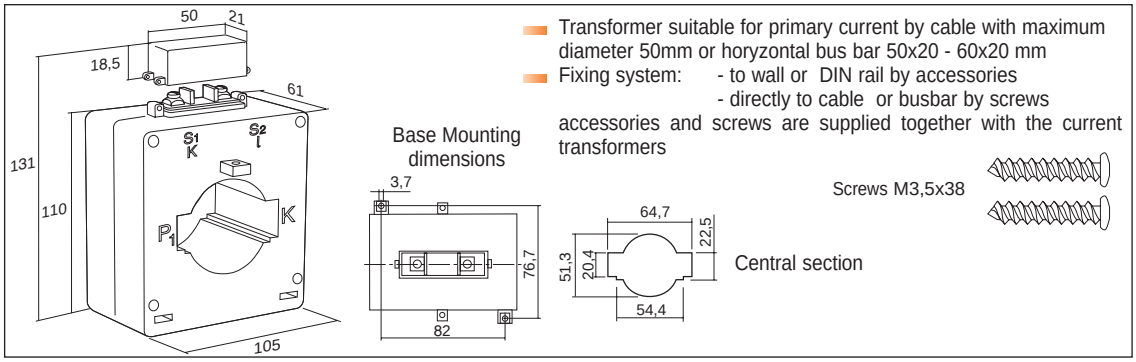

- Transformer suitable for primary current by cable with maximum diameter 50mm or horyzontal bus bar 50x20 - 60x20 mm
- Fixing system: - to wall or DIN rail by accessories
  - directly to cable or busbar by screws

accessories and screws are supplied together with the current transformers

A primary current	kg weigth	class 1 secondary output 20mA code	class 1 secondary output 10V code
250	1	For these currents use the correspondent model TAR6 secondary 5A (example TAR6 800) in connection with the external accessory TMAPD1-5/20MA	TMA6-250/10V
300			TMA6-300/10V
400			TMA6-400/10V
500			TMA6-500/10V
600	0,7		TMA6-600/10V
800			TMA6-800/10V

A primary current	kg weigth	class 1 secondary output 20mA code	class 1 secondary output 10V code
1000	0,7	For these currents use the correspondent model TAR6 secondary 5A (example TAR6 800) in connection with the external accessory TMAPD1-5/20MA	TMA6-1K0/10V
1200			TMA6-1K2/10V
1500	0,8		TMA6-1K5/10V
2000			TMA6-2K0/10V
2500	1		TMA6-2K5/10V

TMA8

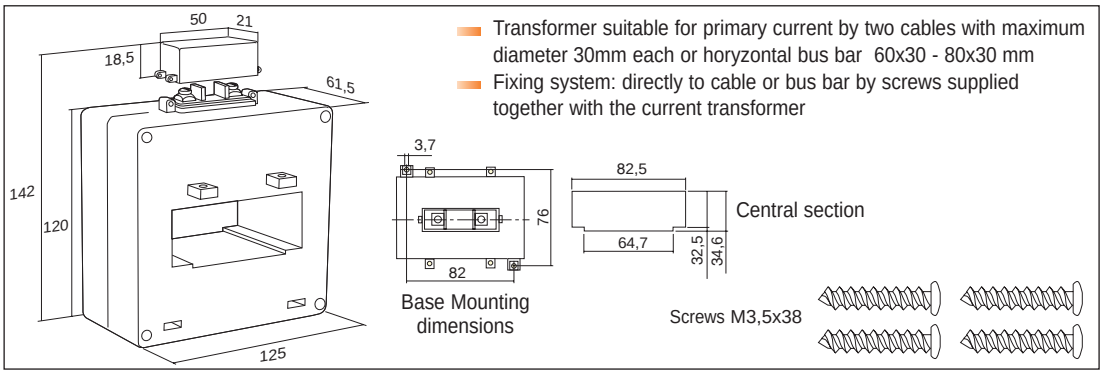

- Transformer suitable for primary current by two cables with maximum diameter 30mm each or horyzontal bus bar 60x30 - 80x30 mm
- Fixing system: directly to cable or bus bar by screws supplied together with the current transformer

A primary current	kg weigth	class 1 secondary output 20mA code	class 1 secondary output 10V code
400	0,8	For these currents use the correspondent model TAR8 secondary 5A (example TAR8 2000) in connection with the external accessory TMAPD1-5/20MA	TMA8-400/10V
500	1		TMA8-500/10V
600			TMA8-600/10V
800	0,7		TMA8-800/10V
1000			TMA8-1K0/10V

A primary current	kg weigth	class 1 secondary output 20mA code	class 1 secondary output 10V code
1200	0,7	For these currents use the correspondent model TAR8 secondary 5A (example TAR8 2000) in connection with the external accessory TMAPD1-5/20MA	TMA8-1K2/10V
1500	1		TMA8-1K5/10V
2000			TMA8-2K0/10V
2500			TMA8-2K5/10V
3000	1,5		TMA8-3K0/10V

STANDARD SERIES - 4/20 mA DC EXTERNAL SUPPLY CURRENT TRANSFORMERS

- Burden: < 1VA
- Auxiliary power supply 230VCA (12 - 24 - 48VDC on request)
- Response time 500 msec
- Resistive load 300 ohm max
- Testing voltage: 0,72kV/3kV
- Frequency 50Hz
- Sealable terminals cover included
- Different characteristics on request

CONNECTION DIAGRAM FOR TMAAPD1

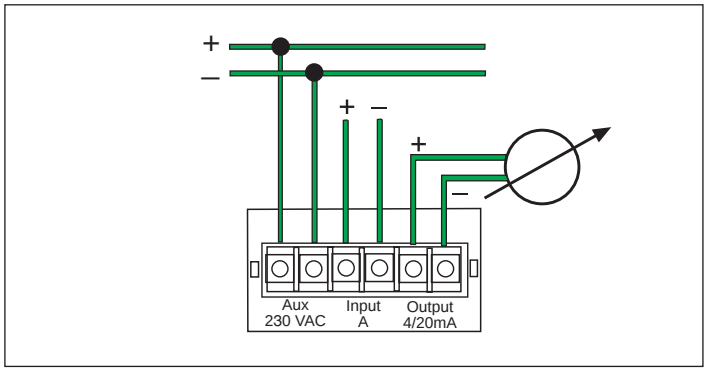

CONNECTION DIAGRAM FOR OTHER TMAA...

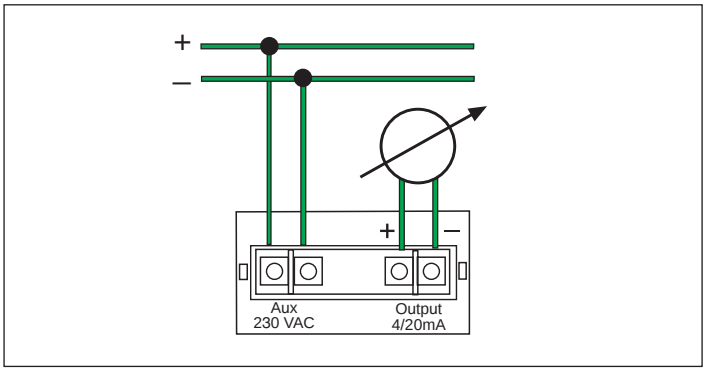

TMAAPD1

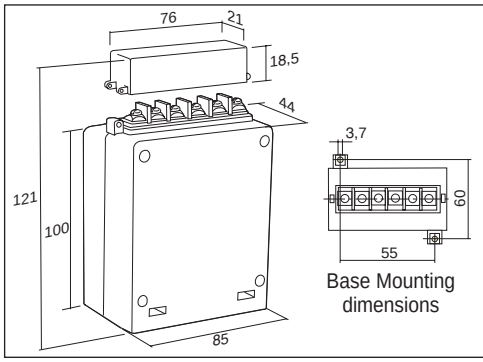

- Transformer with wound primary cable, primary and secondary currents on the terminals
- Fixing system: to wall by accessories supplied together with the current transformer

A	kg	class 1
primary current	weigth	secondary current 4/20mA
		code
1 5 10 15	0,5	TMAAPD1-1/4-20MA TMAAPD1-5/4-20MA TMAAPD1-10/4-20MA TMAAPD1-15/4-20MA

A	kg	class 1
primary current	weigth	secondary current 4/20mA
		code
20 25 40	0,5	TMAAPD1-20/4-20MA TMAAPD1-25/4-20MA TMAAPD1-40/4-20MA

TMAAPD2

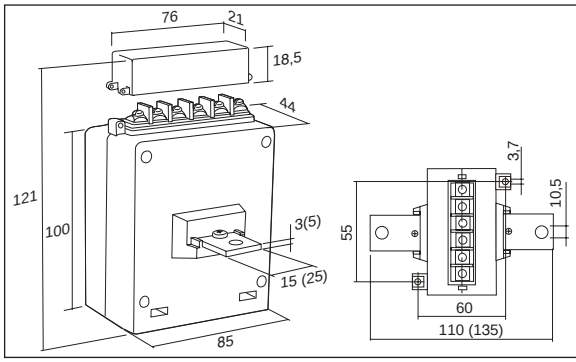

Base Mounting
dimensions

- Fixing system: to wall by accessories supplied together with the current transformer
- Transformer with wound primary cable, primary current from incorporated central bar
  15x3x110 mm up to 200A
  25x3x135 mm up to 300A
  25x5x135 mm up to 400A
  secondary currents on terminals

A	kg	class 1
primary current	weigth	secondary current 4/20mA
		code
50 60 80 100 150	0,5	TMAAPD2-50/4-20MA TMAAPD2-60/4-20MA TMAAPD2-80/4-20MA TMAAPD2-100/4-20MA TMAAPD2-150/4-20MA

A	kg	class 1
primary current	weigth	secondary current 4/20mA
		code
200 250 300 400	0,5	TMAAPD2-200/4-20MA TMAAPD2-250/4-20MA TMAAPD2-300/4-20MA TMAAPD2-400/4-20MA

TMAA4D3

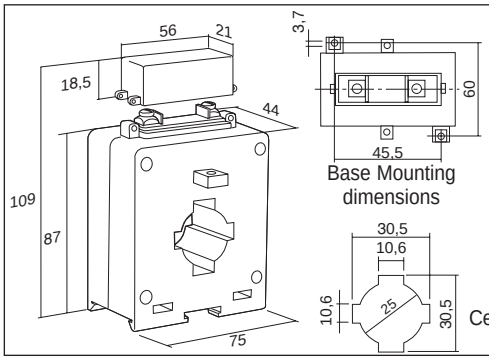

- Transformer suitable for primary current by cable with maximum diameter 25mm or horyzontal bar 30x10 mm; vertical bar 30x10 mm
- Fixing system: - to wall or DIN rail by accessories
  - directly to cable or busbar by screws

accessories and screws are supplied together with the current transformers

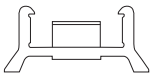

DIN rail accessory

Screws M3,5x38

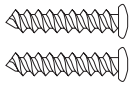

A primary current	kg weigth	class 1 secondary current 4/20mA code
50	0,7	TMAA4D3-50/4-20MA
60		TMAA4D3-60/4-20MA
80		TMAA4D3-80/4-20MA
100		TMAA4D3-100/4-20MA
150		TMAA4D3-150/4-20MA

A primary current	kg weigth	class 1 secondary current 4/20mA code
200	0,7	TMAA4D3-200/4-20MA
250		TMAA4D3-250/4-20MA
300		TMAA4D3-300/4-20MA
400		TMAA4D3-400/4-20MA
500		TMAA4D3-500/4-20MA

TMAA5

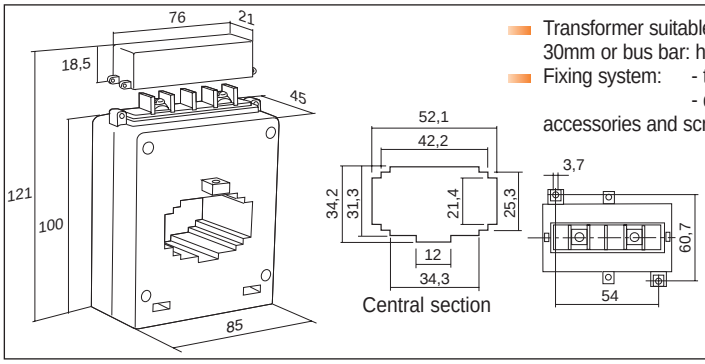

- Transformer suitable for primary current by cable with maximum diameter 30mm or bus bar: horyzontal 30x30 - 40x25 - 50x20 mm; vertical 30x10 mm
- Fixing system: - to wall by accessories
  - directly to cable or bus bar by screws

accessories and screws are supplied together with the current transformer

Screws M3,5x38

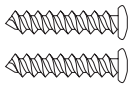

A primary current	kg weigth	class 1 secondary current 4/20mA code
100	0,5	TMAA5-100/4-20MA
150		TMAA5-150/4-20MA
200		TMAA5-200/4-20MA
250		TMAA5-250/4-20MA
300		TMAA5-300/4-20MA
400		TMAA5-400/4-20MA

A primary current	kg weigth	class 1 secondary current 4/20mA code
500	0,5	TMAA5-500/4-20MA
600		TMAA5-600/4-20MA
800		TMAA5-800/4-20MA
1000	0,4	TMAA5-1K0/4-20MA
1200		TMAA5-1K2/4-20MA
1500		TMAA5-1K5/4-20MA

TMAA6

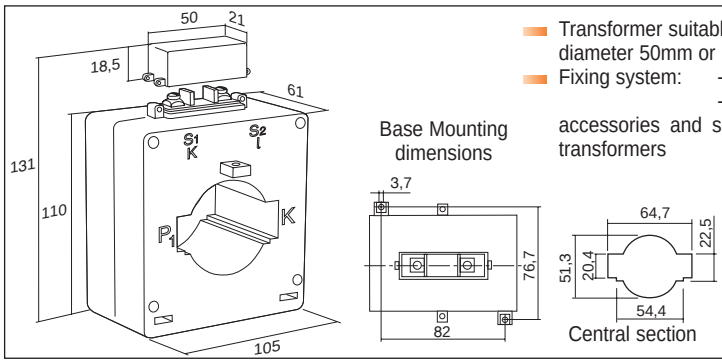

- Transformer suitable for primary current by cable with maximum diameter 50mm or horyzontal bus bar 50x20 - 60x20 mm
- Fixing system: - to wall or DIN rail by accessories
  - directly to cable or busbar by screws

accessories and screws are supplied together with the current transformers

Screws M3,5x38

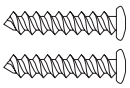

A primary current	kg weigth	class 1 secondary current 4/20mA code
250	0,7	TMAA6-250/4-20MA
300		TMAA6-300/4-20MA
400		TMAA6-400/4-20MA
500		TMAA6-500/4-20MA
600		TMAA6-600/4-20MA
800		TMAA6-800/4-20MA

A primary current	kg weigth	class 1 secondary current 4/20mA code
1000	0,7	TMAA6-1K0/4-20MA
1200		TMAA6-1K2/4-20MA
1500	0,8	TMAA6-1K5/4-20MA
2000		TMAA6-2K0/4-20MA
2500	1	TMAA6-2K5/4-20MA

TMAA8

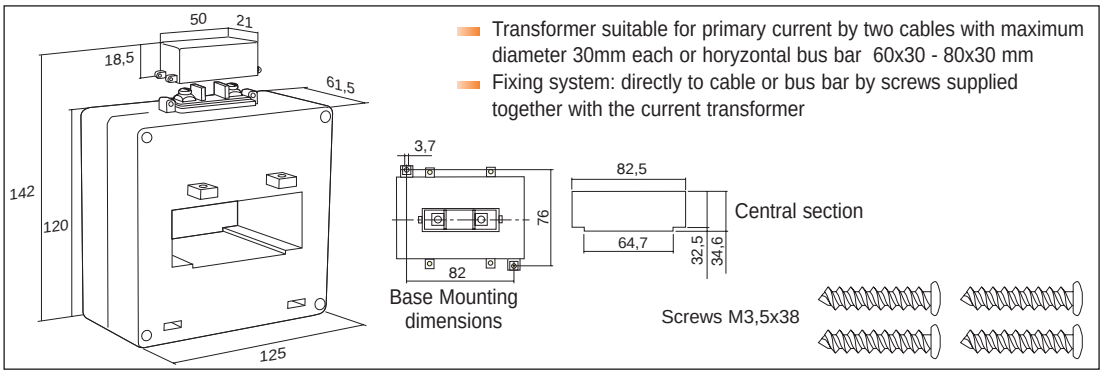

- Transformer suitable for primary current by two cables with maximum diameter 30mm each or horyzontal bus bar 60x30 - 80x30 mm
- Fixing system: directly to cable or bus bar by screws supplied together with the current transformer

A primary current	kg weigth	class 1 secondary current 4/20mA code
400	0,7	TMAA8-400/4-20MA
500		TMAA8-500/4-20MA
600		TMAA8-600/4-20MA
800		TMAA8-800/4-20MA
1000		TMAA8-1K0/4-20MA

A primary current	kg weigth	class 1 secondary current 4/20mA code
1200	0,7	TMAA8-1K2/4-20MA
1500	1	TMAA8-1K5/4-20MA
2000		TMAA8-2K0/4-20MA
2500		TMAA8-2K5/4-20MA
3000	1,5	TMAA8-3K0/4-20MA

TMAA12

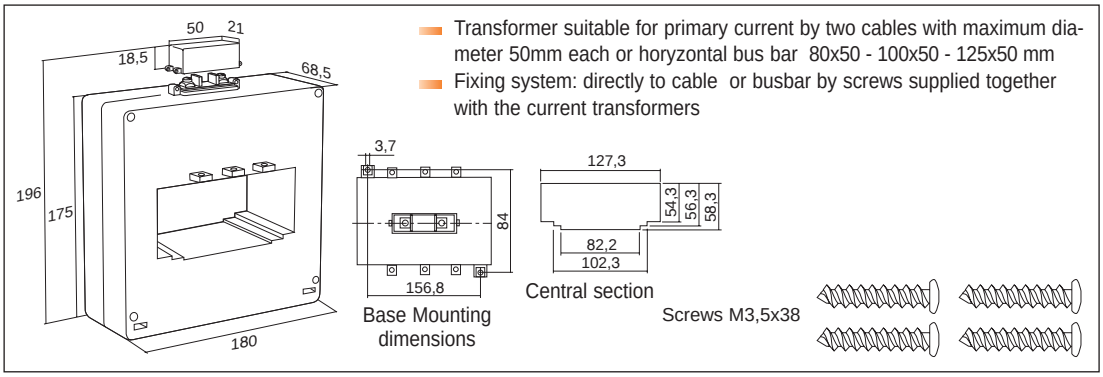

- Transformer suitable for primary current by two cables with maximum diameter 50mm each or horyzontal bus bar 80x50 - 100x50 - 125x50 mm
- Fixing system: directly to cable or busbar by screws supplied together with the current transformers

A primary current	kg weigth	class 1 secondary current 4/20mA code
400	1	TMAA12-400/4-20MA
500		TMAA12-500/4-20MA
600		TMAA12-600/4-20MA
800		TMAA12-800/4-20MA
1000		TMAA12-1K0/4-20MA
1200		TMAA12-1K2/4-20MA

A primary current	kg weigth	class 1 secondary current 4/20mA code
1500	1	TMAA12-1K5/4-20MA
2000		TMAA12-2K0/4-20MA
2500	1,5	TMAA12-2K5/4-20MA
3000		TMAA12-3K0/4-20MA
4000	2	TMAA12-4K0/4-20MA

TOROIDAL CURRENT TRANSFORMERS

- These transformers are used when it is necessary to survey the homopolar currents(imbalance of current existing on a three phase cable) or in those cases where substantial performance is necessary)
- The dimensions are not pre-determined but calculated each time on the basis of the technical characteristics required
- With passing primary cable
- Running temperature: - 25°C ÷ +40°C.
  If immersed in oil, the maximum running temperature rises to 60°C
- Finished with cotton taping protected with insulating epoxy varnish

TART

- **When ordering, indicate:**
  - **primary current value (min. 50A)**
  - **secondary current value (min. 1A)**
  - **precision class**
  - **burden (VA)**
  - **internal diameter**

- The external diameter and the thickness are variable according to the above mentioned data
  The insulation betwee the primary and the secondary cables must be carried out by the client during assembly

“HALL” EFFECT - CURRENT TRANSFORMERS

- Burden: < 2,5VA
- Auxiliary power supply 230VCA (12 - 24 - 48VDC on request)
- Response time 500 msec
- Resistive load 500 ohm max
- Testing voltage: 0,72kV/3kV
- Sealable terminals cover included
- Different characteristics on request
- Positive and negative output (except secondary 4/20mA)

GENERAL DESCRIPTION

- Operative system “Open Loop (O/L)”
  The magnetic flux creaded by primary current IP, is concentradet in a magnetic circuit and measured on the open part of toroid by and Hall sensor. The signal exiting from this sensor is conditioned in the way to represent exactly the primary current value.
- Function of sensor is based on “Hall effect” fisic principe:
  when a magnetic field is applied in a perpendicular way to a cable, a transverse voltage to the current flux direction is generated (Hall voltage).

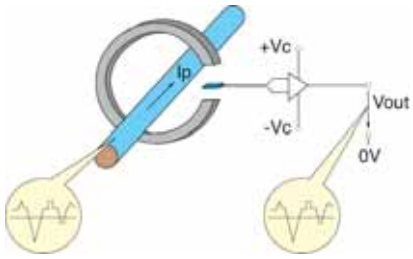

- This type on C.T. can be used as alternative to the shunts when high voltages are in the field and it is necesasry to have more higher galvanic separations.

CONNECTION DIAGRAM FOR TAHPD1

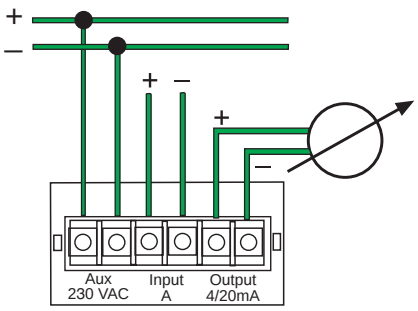

CONNECTION DIAGRAM FOR OTHER TAH...

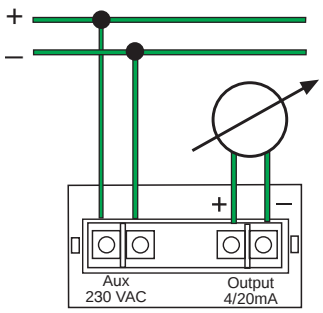

TAHPD1

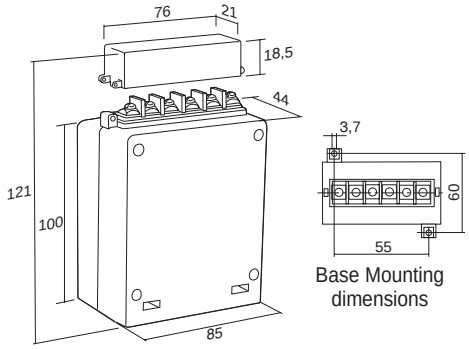

- Transformer with wound primary cable, primary and secondary currents on the terminals
- Fixing system: to wall by accessories supplied together with the current transformer
- Momodirectional output

A	kg	class 1		
primary current	weigth	secondary current 4/20mA	secondary current 20mA	secondary current 10V
		code	code	code
1 5 10 15	0,5	TAHPD1-1/4-20MA TAHPD1-5/4-20MA TAHPD1-10/4-20MA TAHPD1-15/4-20MA	TAHPD1-1/20MA TAHPD1-5/20MA TAHPD1-10/20MA TAHPD1-15/20MA	TAHPD1-1/10V TAHPD1-5/10V TAHPD1-10/10V TAHPD1-15/10V

A	kg	class 1		
primary current	weigth	secondary current 4/20mA	secondary current 20mA	secondary current 10V
		code	code	code
20 25 40	0,5	TAHPD1-20/4-20MA TAHPD1-25/4-20MA TAHPD1-40/4-20MA	TAHPD1-20/20MA TAHPD1-25/20MA TAHPD1-40/20MA	TAHPD1-20/10V TAHPD1-25/10V TAHPD1-40/10V

TAHPD2

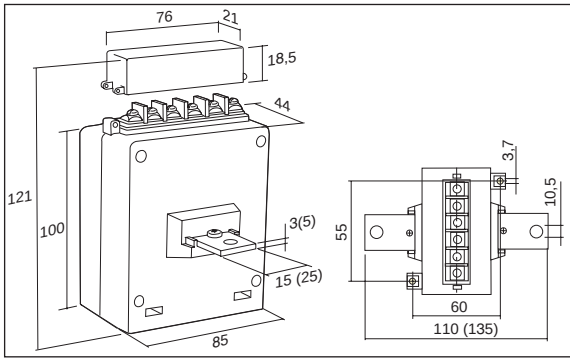

- Fixing system: to wall by accessories supplied together with the current transformer
- Transformer with wound primary cable, primary current from incorporated central bar
  15x3x110 mm up to 200A
  25x3x135 mm up to 300A
  25x5x135 mm up to 400A
  secondary currents on terminals

Base Mounting dimensions

A	kg	class 1		
primary current	weigth	secondary current 4/20mA	secondary current 20mA	secondary current 10V
		code	code	code
50	0,5	TAHPD2-50/4-20MA	TAHPD2-50/20MA	TAHPD2-50/10V
60		TAHPD2-60/4-20MA	TAHPD2-60/20MA	TAHPD2-60/10V
80		TAHPD2-80/4-20MA	TAHPD2-80/20MA	TAHPD2-80/10V
100		TAHPD2-100/4-20MA	TAHPD2-100/20MA	TAHPD2-100/10V
150		TAHPD2-150/4-20MA	TAHPD2-150/20MA	TAHPD2-150/10V

A	kg	class 1		
primary current	weigth	secondary current 4/20mA	secondary current 20mA	secondary current 10V
		code	code	code
200	0,5	TAHPD2-200/4-20MA	TAHPD2-200/20MA	TAHPD2-200/10V
250		TAHPD2-250/4-20MA	TAHPD2-250/20MA	TAHPD2-250/10V
300		TAHPD2-300/4-20MA	TAHPD2-300/20MA	TAHPD2-300/10V
400		TAHPD2-400/4-20MA	TAHPD2-400/20MA	TAHPD2-400/10V

TAH4D3

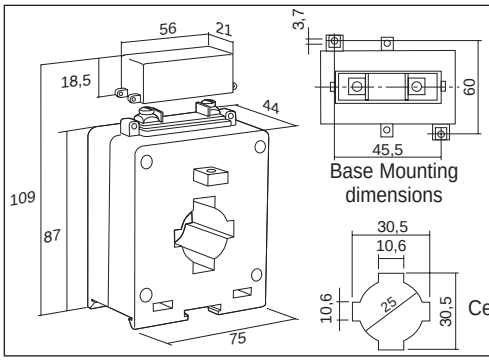

Base Mounting dimensions

Central section

- Transformer suitable for primary current by cable with maximum diameter 25mm or horyzontal bar 30x10 mm; vertical bar 30x10 mm
- Fixing system: - to wall or DIN rail by accessories
  - directly to cable or busbar by screws

accessories and screws are supplied together with the current transformers

DIN rail accessory

Screws M3,5x38

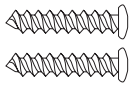

A	kg	class 1		
primary current	weigth	secondary current 4/20mA	secondary current 20mA	secondary current 10V
		code	code	code
50	0,7	TAH4D3-50/4-20MA	TAH4D3-50/20MA	TAH4D3-50/10V
60		TAH4D3-60/4-20MA	TAH4D3-60/20MA	TAH4D3-60/10V
80		TAH4D3-80/4-20MA	TAH4D3-80/20MA	TAH4D3-80/10V
100		TAH4D3-100/4-20MA	TAH4D3-100/20MA	TAH4D3-100/10V
150		TAH4D3-150/4-20MA	TAH4D3-150/20MA	TAH4D3-150/10V

A	kg	class 1		
primary current	weigth	secondary current 4/20mA	secondary current 20mA	secondary current 10V
		code	code	code
200	0,7	TAH4D3-200/4-20MA	TAH4D3-200/20MA	TAH4D3-200/10V
250		TAH4D3-250/4-20MA	TAH4D3-250/20MA	TAH4D3-250/10V
300		TAH4D3-300/4-20MA	TAH4D3-300/20MA	TAH4D3-300/10V
400		TAH4D3-400/4-20MA	TAH4D3-400/20MA	TAH4D3-400/10V

TAH5

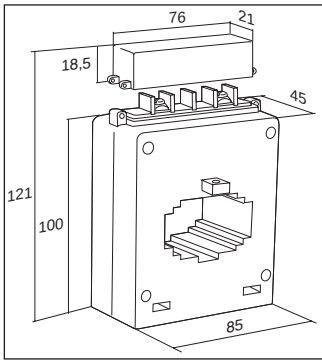

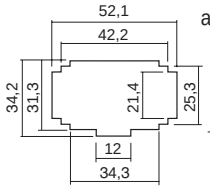

Central section

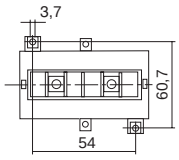

Base Mounting dimensions

- Transformer suitable for primary current by cable with maximum diameter 30mm or bus bar: horyzontal 30x30 - 40x25 - 50x20 mm; vertical 30x10 mm
- Fixing system: - to wall by accessories
  - directly to cable or bus bar by screws

accessories and screws are supplied together with the current transformer

Screws M3,5x38

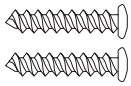

A	kg	class 1		
primary current	weigth	secondary current 4/20mA	secondary current 20mA	secondary current 10V
		code	code	code
100	0,5	TAH5-100/4-20MA	TAH5-100/20MA	TAH5-100/10V
150		TAH5-150/4-20MA	TAH5-150/20MA	TAH5-150/10V
200		TAH5-200/4-20MA	TAH5-200/20MA	TAH5-200/10V

A	kg	class 1		
primary current	weigth	secondary current 4/20mA	secondary current 20mA	secondary current 10V
		code	code	code
250	0,5	TAH5-250/4-20MA	TAH5-250/20MA	TAH5-250/10V
300		TAH5-300/4-20MA	TAH5-300/20MA	TAH5-300/10V
400		TAH5-400/4-20MA	TAH5-400/20MA	TAH5-400/10V

SUMMATION CURRENT TRANSFORMERS

- For vectorial summation of the current of several phases in a single voltage system
- Maximum reference voltage for insulation: 0,72 kV / 3kV
- **If the primary currents have different ratios, specify the ratios when ordering**

TARS

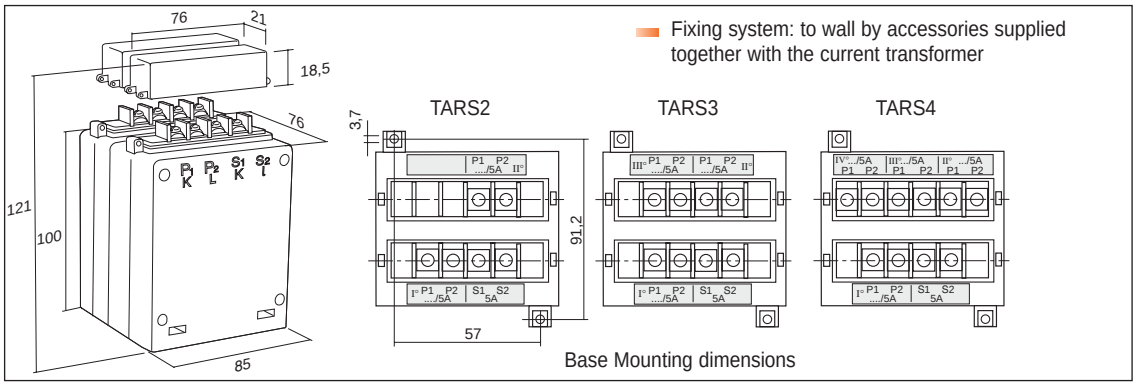

- Fixing system: to wall by accessories supplied together with the current transformer

kg	class 0,5	
weigth	secondary current 5A	
	code	VA
1	TARS2 5+5 TARS3 5+5+5 TARS4 5+5+5+5	10 10 10

kg	class 0,5	
weigth	secondary current 1A	
	code	VA
1	TARS21 1+1 TARS31 1+1+1 TARS41 1+1+1+1	10 10 10

TARSD

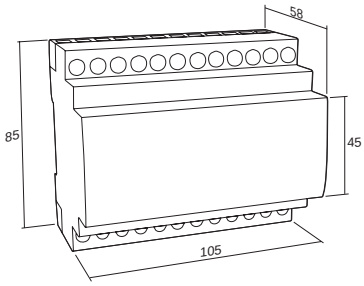

Diagram TARSD2

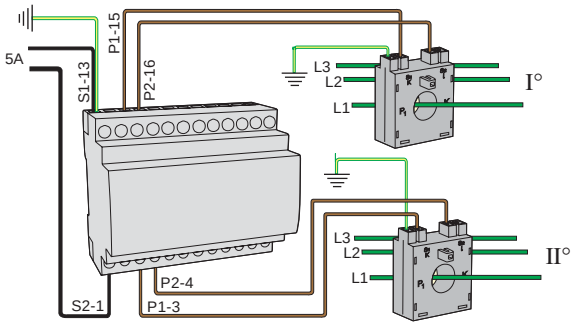

Diagram TARSD4

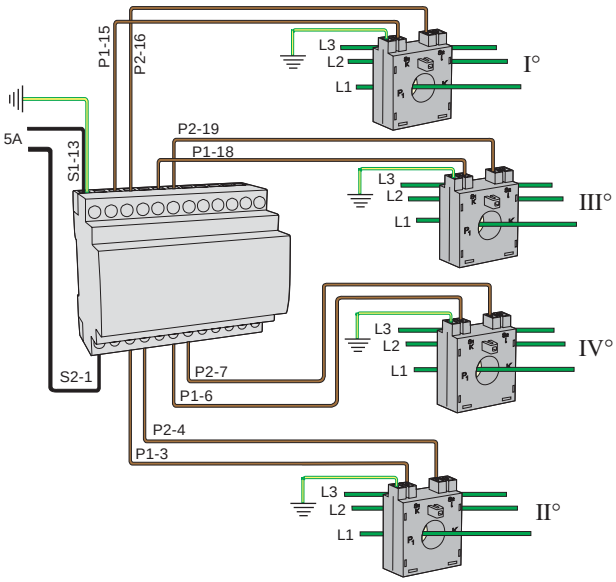

Diagram TARSD3

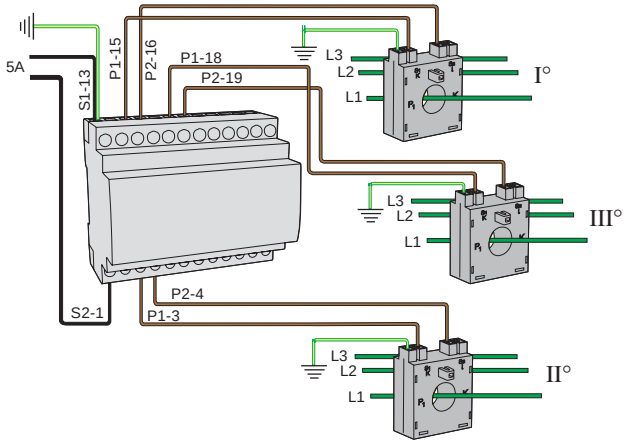

- These diagrams refer to a connection of one phase. In case of a 2 systems connection (ARON) 2 summation CTs and 2 current transformers (one for phase L1 and one for phase L3) must be used. In case of 3 systems connection 3 summation CTs and 3 current transformers (one for phase L1, one for phase L2 and one for phase L3) must be used.
- Fixing system: to DIN rail
- The dimension of 105 mm correspond to a 6 DIN modules (17,5 mm each)

kg	class 0,5	
weigth	secondary current 5A	
	code	VA
1	TARSD2 5+5 TARSD3 5+5+5 TARSD4 5+5+5+5	6 6 6

kg	class 0,5	
weigth	secondary current 1A	
	code	VA
1	TARSD21 1+1 TARSD31 1+1+1 TARSD41 1+1+1+1	6 6 6

SPLIT CORE CURRENT TRANSFORMERS

- Fixing system: directly to bus bar by the insulated screws supplied together with the current transformer
- Different characteristics on request
- **Secondary current 1A on request** (example code: TCSA40 1 100A)

TCSA40

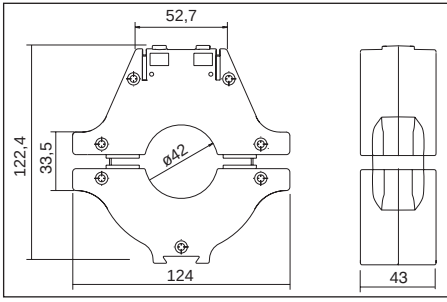

- Transformer suitable for primary current by cable with maximum diameter 40 mm

A primary current	kg weigth	class 0,5 secondary current 5A code	VA	class 1 secondary current 5A code	VA	class 3 secondary current 5A code	VA
100						TCSA40 100A	3
150						TCSA40 150A	3
250	1,2			TCSA40 250A	3		
300				TCSA40 300A	3		
400		TCSA40 400A	4				

A primary current	kg weigth	class 0,5 secondary current 5A code	VA	class 1 secondary current 5A code	VA	class 3 secondary current 5A code	VA
500	1,2	TCSA40 500A	4				
600		TCSA40 600A	4				
800		TCSA40 800A	4				
1000		TCSA40 1K0A	5				

TCSA60

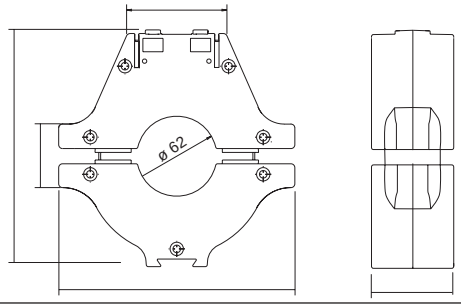

- Transformer suitable for primary current by cable with maximum diameter 60 mm

A primary current	kg weigth	class 0,5 secondary current 5A code	VA	class 1 secondary current 5A code	VA	class 3 secondary current 5A code	VA
300				TCSA60 300A	3		
400	1,5	TCSA60 400A	4				
500		TCSA60 500A	4				

A primary current	kg weigth	class 0,5 secondary current 5A code	VA	class 1 secondary current 5A code	VA	class 3 secondary current 5A code	VA
600	1,5	TCSA60 600A	4				
800		TCSA60 800A	4				
1000		TCSA60 1K0A	5				

TARA100

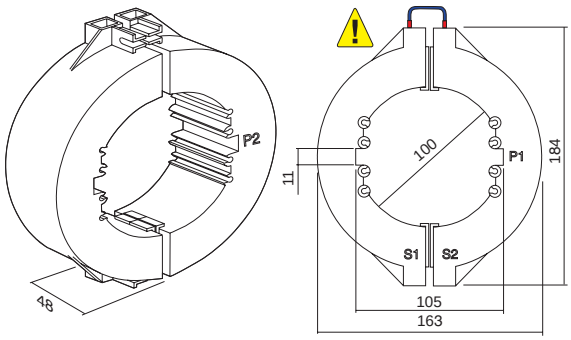

- Transformer suitable for primary current by cable with maximum diameter 100mm or horyzontal bus bar 100x10 mm
- For to have a correct work it is necessary to make a bridge as indicated in the draw.

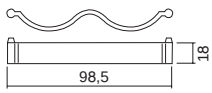

2 x accessory for fixing to bar or cable

A primary current	kg weigth	class 0,5 secondary current 5A code	VA	class 1 secondary current 5A code	VA	class 3 secondary current 5A code	VA
500		TARA100 500A	5				
600		TARA100 600A	5				
800		TARA100 800A	8				
1000		TARA100 1K0A	10				

A primary current	kg weigth	class 0,5 secondary current 5A code	VA	class 1 secondary current 5A code	VA	class 3 secondary current 5A code	VA
1200		TARA100 1K2A	20				
1500		TARA100 1K5A	30				
2000		TARA100 2K0A	40				

TARA105

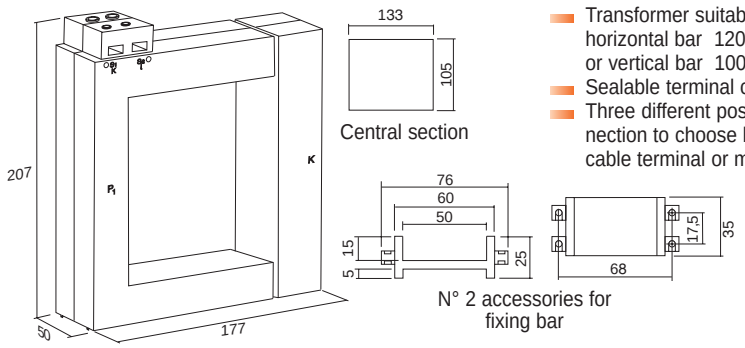

- Transformer suitable for primary current by horizontal bar 120x10 - 2x120x10 - 3x120x10 mm or vertical bar 100x10 - 2x100x10 - 3x100x10 mm
- Sealable terminal covers ATCS1C on request
- Three different possibilities of the secondary's connection to choose between: fast-on, metal point cable terminal or metal fork cable terminal

N° 8 Screws ABS 4,8x40

A	kg	class 0,5		class 1		class 3	
primary current	weigth	secondary current 5A		secondary current 5A		secondary current 5A	
		code	VA	code	VA	code	VA
1000	1,5	TARA105 1K0A	10				
1200		TARA105 1K2A	10				
1500		TARA105 1K5A	10				

A	kg	class 0,5		class 1		class 3	
primary current	weigth	secondary current 5A		secondary current 5A		secondary current 5A	
		code	VA	code	VA	code	VA
2000	2	TARA105 2K0A	15				
2500		TARA105 2K5A	20				

TARA126

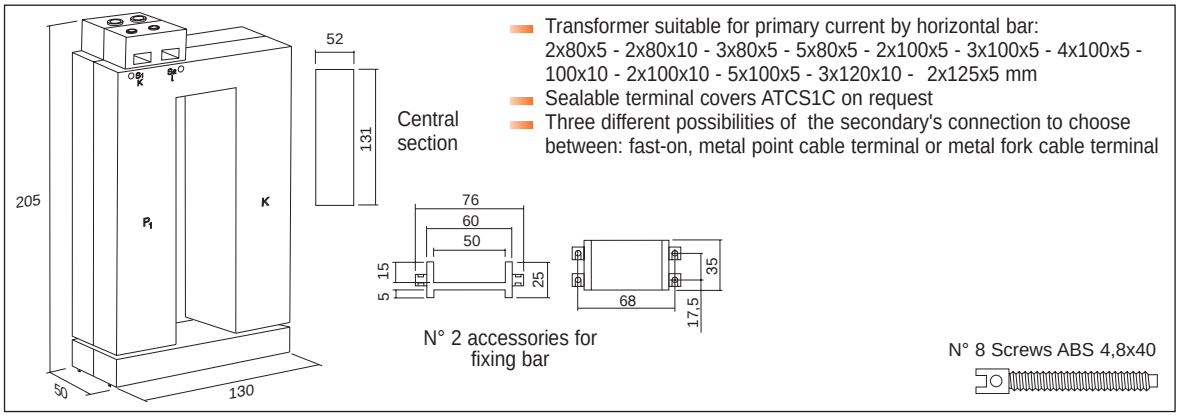

- Transformer suitable for primary current by horizontal bar: 2x80x5 - 2x80x10 - 3x80x5 - 5x80x5 - 2x100x5 - 3x100x5 - 4x100x5 - 100x10 - 2x100x10 - 5x100x5 - 3x120x10 - 2x125x5 mm
- Sealable terminal covers ATCS1C on request
- Three different possibilities of the secondary's connection to choose between: fast-on, metal point cable terminal or metal fork cable terminal

N° 8 Screws ABS 4,8x40

A	kg	class 0,5		class 1		class 3	
primary current	weigth	secondary current 5A		secondary current 5A		secondary current 5A	
		code	VA	code	VA	code	VA
1250	1,5	TARA126 1K25A	20				
1500		TARA126 1K5A	20				

A	kg	class 0,5		class 1		class 3	
primary current	weigth	secondary current 5A		secondary current 5A		secondary current 5A	
		code	VA	code	VA	code	VA
2000	2	TARA126 2K0A	20				
2500		TARA126 2K5A	20				

TARA166

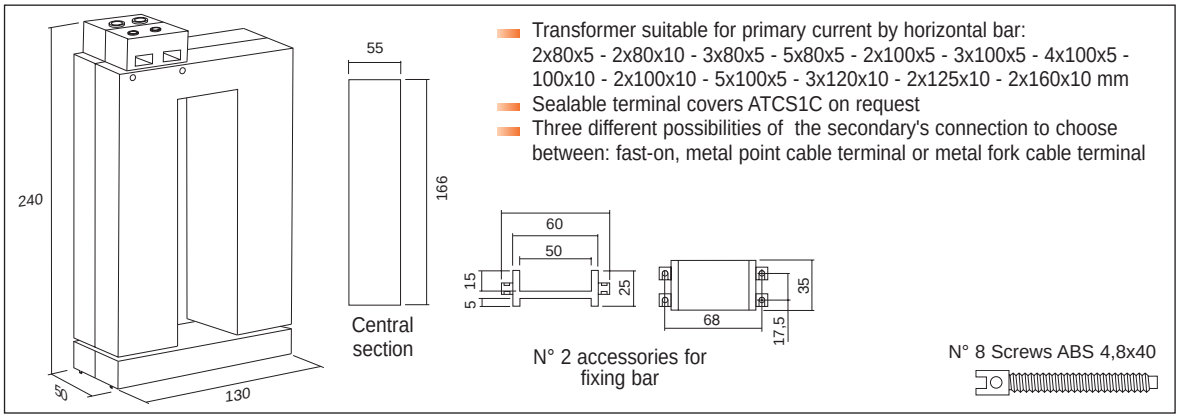

- Transformer suitable for primary current by horizontal bar: 2x80x5 - 2x80x10 - 3x80x5 - 5x80x5 - 2x100x5 - 3x100x5 - 4x100x5 - 100x10 - 2x100x10 - 5x100x5 - 3x120x10 - 2x125x10 - 2x160x10 mm
- Sealable terminal covers ATCS1C on request
- Three different possibilities of the secondary's connection to choose between: fast-on, metal point cable terminal or metal fork cable terminal

N° 8 Screws ABS 4,8x40

A	kg	class 0,5		class 1		class 3	
primary current	weigth	secondary current 5A		secondary current 5A		secondary current 5A	
		code	VA	code	VA	code	VA
1250	1,5	TARA166 1K25A	20				
1500		TARA166 1K5A	20				
2000		TARA166 2K0A	20				
2500	2	TARA166 2K5A	20				

A	kg	class 0,5		class 1		class 3	
primary current	weigth	secondary current 5A		secondary current 5A		secondary current 5A	
		code	VA	code	VA	code	VA
3000	2,5	TARA166 3K0A	20				
4000		TARA166 4K0A	30				
5000	3	TARA166 5K0A	30				

TARA200

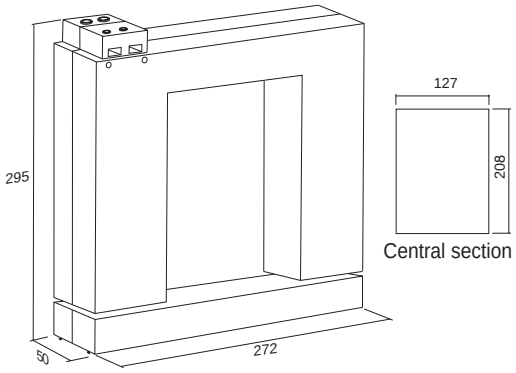

- Transformer suitable for primary current by horizontal bar 120x10 - 2x120x10 - 3x120x10 mm or vertical bar 200x10 - 2x200x10 - 3x200x10 mm
- Sealable terminal covers ATCS1C on request
- Three different possibilities of the secondary's connection to choose between: fast-on, metal point cable terminal or metal fork cable terminal

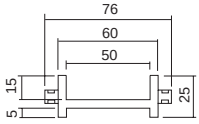

N° 2 accessories for fixing bar

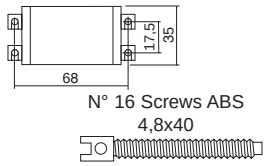

N° 16 Screws ABS 4,8x40

A primary current	kg weigth	class 0,5 secondary current 5A code	VA	class 1 secondary current 5A code	VA	class 3 secondary current 5A code	VA
1000	2	TARA200 1K0A	10				
1200		TARA200 1K2A	10				
1500	2,5	TARA200 1K5A	10				
2000		TARA200 2K0A	15				
2500	3	TARA200 2K5A	20				

A primary current	kg weigth	class 0,5 secondary current 5A code	VA	class 1 secondary current 5A code	VA	class 3 secondary current 5A code	VA
3000	3	TARA200 3K0A	20				
4000	3,5	TARA200 4K0A	30				
5000	4	TARA200 5K0A	30				
6000	4,5	TARA200 6K0A	30				

OVERLOAD CURRENT TRANSFORMERS

TARSV

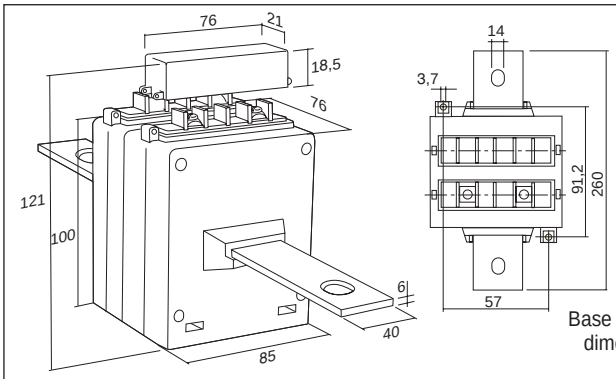

Base Mounting dimensions

- Transformer with wound primary cable, primary current by incorporated bus bar and secondary current on terminals.
- Fixing system: to wall by accessories
- Possible overload of 400%

A primary current	kg weigth	class 0,5 secondary current 5A code	VA	class 1 secondary current 5A code	VA	class 3 secondary current 5A code	VA
50 (200)	1,6	TARSV 50(200)	5				
100 (400)		TARSV 100(400)	5				

A primary current	kg weigth	class 0,5 secondary current 5A code	VA	class 1 secondary current 5A code	VA	class 3 secondary current 5A code	VA
200 (800)	1,6	TARSV 200(800)	5				

RATIO CORRECTING CURRENT TRANSFORMERS

- These transformers are used when it is necessary to correct the transformation ratio of the main CT in order to adapt it to particular needs on the part of the measuring circuit or the phase displacement caused by star / delta connections, filtering the eventual homopolar currents.
- Transformer with wound primary cable, primary and secondary currents on the terminals
- Fixing system: to wall or to DIN rail by accessories supplied together with the current transformer
- Sealable terminals cover included
- Different characteristics on request
- **When ordering indicate exactly the primary and secondary current**

TARCRD

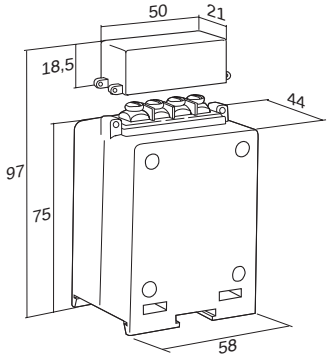

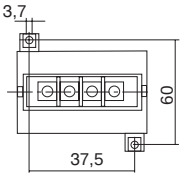

Base Mounting dimensions

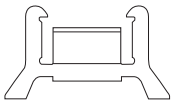

DIN rail accessory

A	A	kg	Power VA		
primary current	secondary current	Weigth	Class		
			0,5	1	3
0,5 ÷ 40	0,2 ÷ 10	0,3	2	4	6

TARCRD1

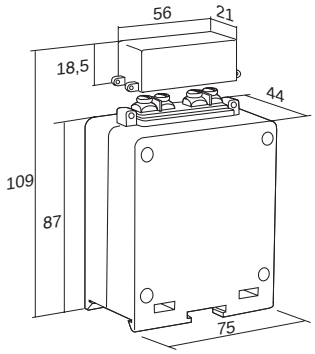

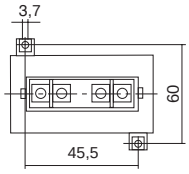

Base Mounting dimensions

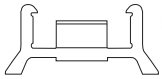

DIN rail accessory

A	A	kg	Power VA	
primary current	secondary current	Weigth	Class	
			0,5	1
0,5 ÷ 40	0,5 ÷ 10	0,4	10	15

TARCR2

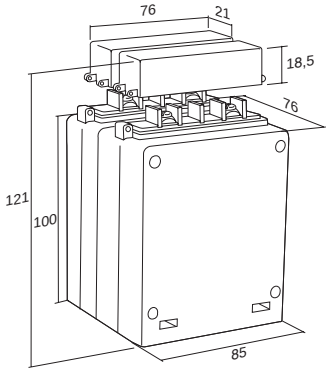

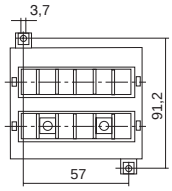

Base Mounting dimensions

A	A	kg	Power VA		
primary current	secondary current	Weigth	Class		
			0,5	1	5P10
0,5 ÷ 40	0,5 ÷ 10	0,5	20	40	4

CURRENT TRANSFORMERS FOR ELECTRONICS

- These transformers are used for measuring current from 25A to 600A (nominal primary current).The peculiar characteristic of these transformers is the high number of turns in the secondary cable. This makes it possible to have a very low secondary current, suitable for an electronic measuring circuit.
  The secondary current can be seen as voltage across a resistor.
  The resistor, of low power and cost, is directly fitted onto the printed circuit.
- Appliance sphere: - current sensor for circuits which protect motors, UPS and similar;
  - current sensor for measuring instruments (current probe).
- Insulation voltage between primary and secondary elements 4kV
- Frequency: 50 - 60Hz
- Other characteristics on request

TAMEL

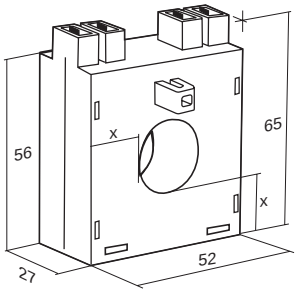

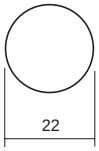

Central section

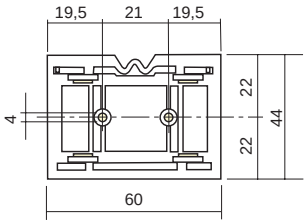

Accessory for wall or DIN rail fixing

A	%	kg											n	Ru (Ohm)	Vu (VAC)
primary current	class	weigth	secondary current 0,05 A		secondary current 0,1 A		secondary current 0,2 A		secondary current 0,4 A		secondary current 0,6 A		numbers of turns in the secondary cable	resistance of secondary load	voltage available for secondary element
			code	VA	code	VA	code	VA	code	VA	code	VA			
25	2		TAMEL 25/0.05A	0,20									n_{1-2}=500	40	2
25	2,5						TAMEL 25/0.2A	0,6					n_{1-2}=125	10	4
50	1		TAMEL 50/0.05A	0,20									n_{1-2}=1000	80	4
50	1,5						TAMEL 50/0.2A	0,6					n_{1-3}=250	10	4
100	0,4				TAMEL 100/0.1A	1,25							n_{1-4}=1000	20	2
100	0,8						TAMEL 100/0.2A	1,25					n_{1-4}=500	20	4
200	0,5	0,2					TAMEL 200/0.2A	4					n_{1-2}=1000	20	4
200	1								TAMEL 200/0.4A	4			n_{1-2}=500	20	8
300	0,3						TAMEL 300/0.2A	4					n_{1-3}=1500	20	4
400	0,2						TAMEL 400/0.2A	4					n_{1-4}=2000	20	4
400	0,4								TAMEL 400/0.4A	4			n_{1-3}=1000	20	8
600	0,5						TAMEL 600/0.2A	4					n_{1-4}=3000	20	4
600	0,2								TAMEL 600/0.4A	4			n_{1-4}=1500	20	8
600	0,2										TAMEL 600/0.6A	4	n_{1-4}=1000	10	6

VOLTAGE TRANSFORMERS

- Construction according to the CEI and IEC regulation
- Case in ABS resin
- Maximum reference voltage for insulation: 0,72 kV
- Test voltage: 3 kV a 50 Hz for 1 minute
- Permanent overload: 1,2 Vn
- Fixing to wall or DIN rail by accessories
- Sealable terminals cover included
- Primary voltages different from the standard can be manufactured on request
- Secondary voltages on request
- **When ordering indicate exactly the primary and secondary voltages**

TVR2

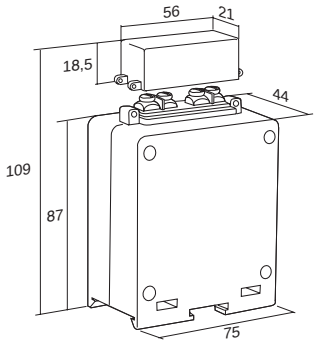

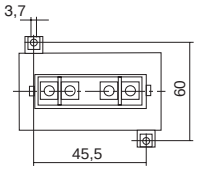

Base Mounting dimensions

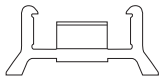

DIN rail accessory

V	kg	class 1	
primary voltage	weigth	code	VA
100	1,5	TVR2 100/.....(value of secondary voltage)	2
110		TVR2 110/.....(value of secondary voltage)	
115		TVR2 115/.....(value of secondary voltage)	
230		TVR2 230/.....(value of secondary voltage)	
380		TVR2 380/.....(value of secondary voltage)	
400		TVR2 400/.....(value of secondary voltage)	
440		TVR2 440/.....(value of secondary voltage)	
500		TVR2 500/.....(value of secondary voltage)	
600		TVR2 600/.....(value of secondary voltage)	

V	kg	class 1	
primary voltage	weigth	code (ou R signifie √3)	VA
100:√3	1,5	TVR2 100R/.....(value of secondary voltage)	2
110:√3		TVR2 110R/.....(value of secondary voltage)	
115:√3		TVR2 115R/.....(value of secondary voltage)	
230:√3		TVR2 230R/.....(value of secondary voltage)	
380:√3		TVR2 380R/.....(value of secondary voltage)	
400:√3		TVR2 400R/.....(value of secondary voltage)	
440:√3		TVR2 440R/.....(value of secondary voltage)	
500:√3		TVR2 500R/.....(value of secondary voltage)	
600:√3		TVR2 600R/.....(value of secondary voltage)	

TVR6 / TVR10

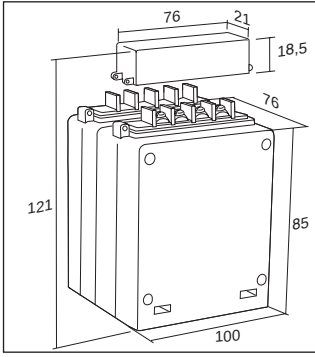

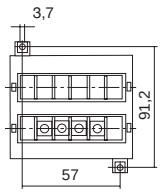

Base Mounting dimensions

V	kg	class 0,5	
primary voltage	weigth	code	VA
100	2	TVR6 100/.....(value of secondary voltage)	6
110		TVR6 110/.....(value of secondary voltage)	
115		TVR6 115/.....(value of secondary voltage)	
230		TVR6 230/.....(value of secondary voltage)	
380		TVR6 380/.....(value of secondary voltage)	
400		TVR6 400/.....(value of secondary voltage)	
440		TVR6 440/.....(value of secondary voltage)	
500		TVR6 500/.....(value of secondary voltage)	
600		TVR6 600/.....(value of secondary voltage)	

V	kg	class 0,5	
primary voltage	weigth	code (ou R signifie √3)	VA
100:√3	2	TVR6 100R/.....(value of secondary voltage)	6
110:√3		TVR6 110R/.....(value of secondary voltage)	
115:√3		TVR6 115R/.....(value of secondary voltage)	
230:√3		TVR6 230R/.....(value of secondary voltage)	
380:√3		TVR6 380R/.....(value of secondary voltage)	
400:√3		TVR6 400R/.....(value of secondary voltage)	
440:√3		TVR6 440R/.....(value of secondary voltage)	
500:√3		TVR6 500R/.....(value of secondary voltage)	
600:√3		TVR6 600R/.....(value of secondary voltage)	

V	kg	class 0,5	
primary voltage	weigth	code	VA
100	2,2	TVR10 100/.....(value of secondary voltage)	10
110		TVR10 110/.....(value of secondary voltage)	
115		TVR10 115/.....(value of secondary voltage)	
230		TVR10 230/.....(value of secondary voltage)	
380		TVR10 380/.....(value of secondary voltage)	
400		TVR10 400/.....(value of secondary voltage)	
440		TVR10 440/.....(value of secondary voltage)	
500		TVR10 500/.....(value of secondary voltage)	
600		TVR10 600/.....(value of secondary voltage)	

V	kg	class 0,5	
primary voltage	weigth	code (ou R signifie √3)	VA
100:√3	2,2	TVR10 100R/.....(value of secondary voltage)	10
110:√3		TVR10 110R/.....(value of secondary voltage)	
115:√3		TVR10 115R/.....(value of secondary voltage)	
230:√3		TVR10 230R/.....(value of secondary voltage)	
380:√3		TVR10 380R/.....(value of secondary voltage)	
400:√3		TVR10 400R/.....(value of secondary voltage)	
440:√3		TVR10 440R/.....(value of secondary voltage)	
500:√3		TVR10 500R/.....(value of secondary voltage)	
600:√3		TVR10 600R/.....(value of secondary voltage)	

TVR16 / TVR40

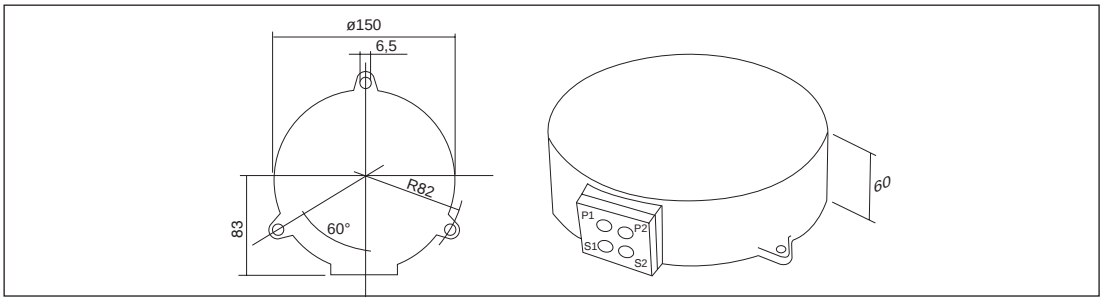

V	kg	class 0,5	
primary voltage	weigth	code	VA
100 110 115 230 380 400 440 500 600	4	TVR16 100/.....(value of secondary voltage) TVR16 110/.....(value of secondary voltage) TVR16 115/.....(value of secondary voltage) TVR16 230/.....(value of secondary voltage) TVR16 380/.....(value of secondary voltage) TVR16 400/.....(value of secondary voltage) TVR16 440/.....(value of secondary voltage) TVR16 500/.....(value of secondary voltage) TVR16 600/.....(value of secondary voltage)	16

V	kg	class 0,5	
primary voltage	weigth	code (ou R signifie √3)	VA
100:√3 110:√3 115:√3 230:√3 380:√3 400:√3 440:√3 500:√3 600:√3	4	TVR16 100R/.....(value of secondary voltage) TVR16 110R/.....(value of secondary voltage) TVR16 115R/.....(value of secondary voltage) TVR16 230R/.....(value of secondary voltage) TVR16 380R/.....(value of secondary voltage) TVR16 400R/.....(value of secondary voltage) TVR16 440R/.....(value of secondary voltage) TVR16 500R/.....(value of secondary voltage) TVR16 600R/.....(value of secondary voltage)	16

V	kg	class 0,5	
primary voltage	weigth	code	VA
100 110 115 230 380 400 440 500 600	4,3	TVR40 100/.....(value of secondary voltage) TVR40 110/.....(value of secondary voltage) TVR40 115/.....(value of secondary voltage) TVR40 230/.....(value of secondary voltage) TVR40 380/.....(value of secondary voltage) TVR40 400/.....(value of secondary voltage) TVR40 440/.....(value of secondary voltage) TVR40 500/.....(value of secondary voltage) TVR40 600/.....(value of secondary voltage)	40

V	kg	class 0,5	
primary voltage	weigth	code (ou R signifie √3)	VA
100:√3 110:√3 115:√3 230:√3 380:√3 400:√3 440:√3 500:√3 600:√3	4,3	TVR40 100R/.....(value of secondary voltage) TVR40 110R/.....(value of secondary voltage) TVR40 115R/.....(value of secondary voltage) TVR40 230R/.....(value of secondary voltage) TVR40 380R/.....(value of secondary voltage) TVR40 400R/.....(value of secondary voltage) TVR40 440R/.....(value of secondary voltage) TVR40 500R/.....(value of secondary voltage) TVR40 600R/.....(value of secondary voltage)	40

TVRE3

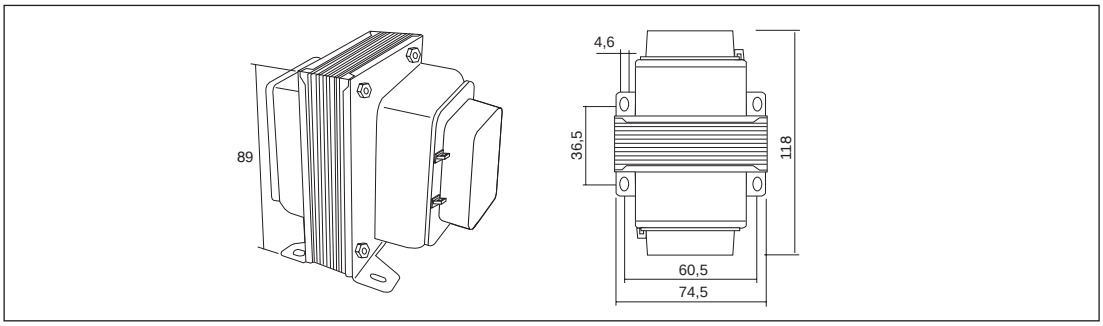

V	kg	class 1	
primary voltage	weigth	code	VA
100 110 115 230 380 400 440 500	0,95	TVRE3 100/.....(value of secondary voltage) TVRE3 110/.....(value of secondary voltage) TVRE3 115/.....(value of secondary voltage) TVRE3 230/.....(value of secondary voltage) TVRE3 380/.....(value of secondary voltage) TVRE3 400/.....(value of secondary voltage) TVRE3 440/.....(value of secondary voltage) TVRE3 500/.....(value of secondary voltage)	3

V	kg	class 1	
primary voltage	weigth	code (ou R signifie √3)	VA
100:√3 110:√3 115:√3 230:√3 380:√3 400:√3 440:√3 500:√3	0,95	TVRE3 100R/.....(value of secondary voltage) TVRE3 110R/.....(value of secondary voltage) TVRE3 115R/.....(value of secondary voltage) TVRE3 230R/.....(value of secondary voltage) TVRE3 380R/.....(value of secondary voltage) TVRE3 400R/.....(value of secondary voltage) TVRE3 440R/.....(value of secondary voltage) TVRE3 500R/.....(value of secondary voltage)	1,5

TVRE6

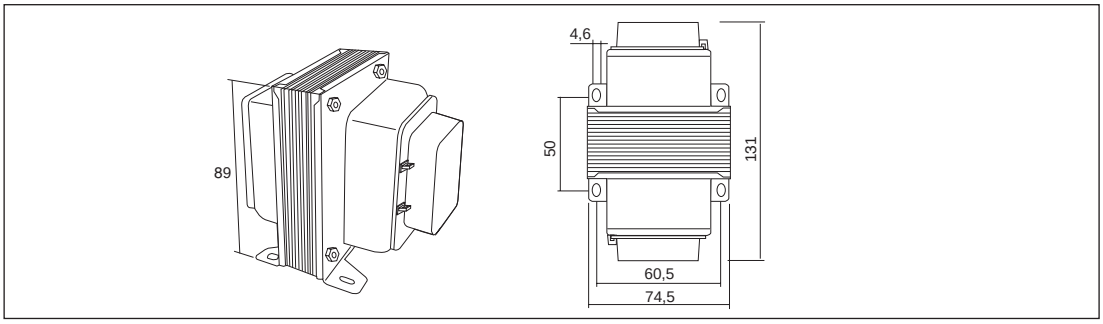

V	kg	class 1	
primary voltage	weigth	code	VA
100 110 115 230 380 400 440 500 600	1,65	TVRE6 100/.....(value of secondary voltage) TVRE6 110/.....(value of secondary voltage) TVRE6 115/.....(value of secondary voltage) TVRE6 230/.....(value of secondary voltage) TVRE6 380/.....(value of secondary voltage) TVRE6 400/.....(value of secondary voltage) TVRE6 440/.....(value of secondary voltage) TVRE6 500/.....(value of secondary voltage) TVRE6 600/.....(value of secondary voltage)	6

V	kg	class 1	
primary voltage	weigth	code (ou R signifie √3)	VA
100:√3 110:√3 115:√3 230:√3 380:√3 400:√3 440:√3 500:√3 600:√3	1,65	TVRE6 100R/.....(value of secondary voltage) TVRE6 110R/.....(value of secondary voltage) TVRE6 115R/.....(value of secondary voltage) TVRE6 230R/.....(value of secondary voltage) TVRE6 380R/.....(value of secondary voltage) TVRE6 400R/.....(value of secondary voltage) TVRE6 440R/.....(value of secondary voltage) TVRE6 500R/.....(value of secondary voltage) TVRE6 600R/.....(value of secondary voltage)	3

TVRE10

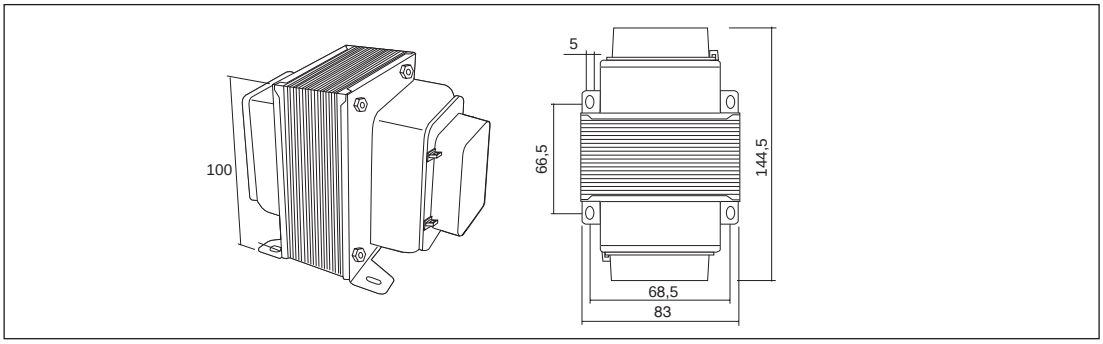

V	kg	class 1	
primary voltage	weigth	code	VA
100 110 115 230 380 400 440 500 600	2,35	TVRE10 100/.....(value of secondary voltage) TVRE10 110/.....(value of secondary voltage) TVRE10 115/.....(value of secondary voltage) TVRE10 230/.....(value of secondary voltage) TVRE10 380/.....(value of secondary voltage) TVRE10 400/.....(value of secondary voltage) TVRE10 440/.....(value of secondary voltage) TVRE10 500/.....(value of secondary voltage) TVRE10 600/.....(value of secondary voltage)	10

V	kg	class 1	
primary voltage	weigth	code (ou R signifie √3)	VA
100:√3 110:√3 115:√3 230:√3 380:√3 400:√3 440:√3 500:√3 600:√3	2,35	TVRE10 100R/.....(value of secondary voltage) TVRE10 110R/.....(value of secondary voltage) TVRE10 115R/.....(value of secondary voltage) TVRE10 230R/.....(value of secondary voltage) TVRE10 380R/.....(value of secondary voltage) TVRE10 400R/.....(value of secondary voltage) TVRE10 440R/.....(value of secondary voltage) TVRE10 500R/.....(value of secondary voltage) TVRE10 600R/.....(value of secondary voltage)	5

TVRE20

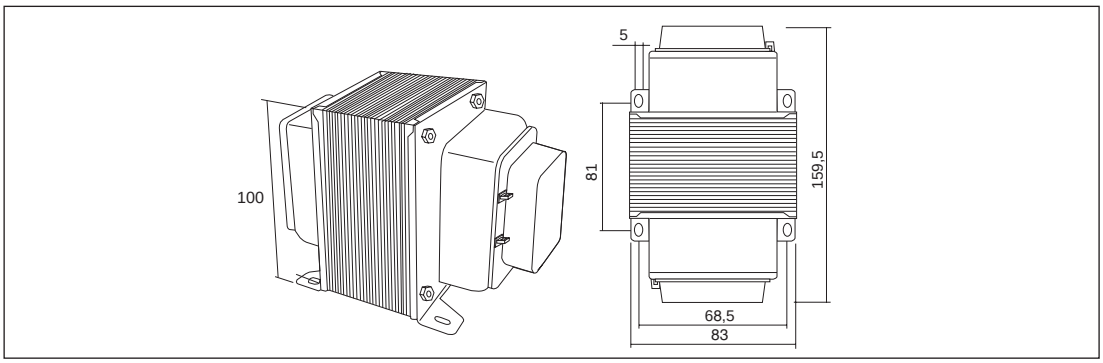

V	kg	class 1	
primary voltage	weigth	code	VA
100	3,45	TVRE20 100/.....(value of secondary voltage)	20
110		TVRE20 110/.....(value of secondary voltage)	
115		TVRE20 115/.....(value of secondary voltage)	
230		TVRE20 230/.....(value of secondary voltage)	
380		TVRE20 380/.....(value of secondary voltage)	
400		TVRE20 400/.....(value of secondary voltage)	
440		TVRE20 440/.....(value of secondary voltage)	
500		TVRE20 500/.....(value of secondary voltage)	
600		TVRE20 600/.....(value of secondary voltage)	
800		TVRE20 800/.....(value of secondary voltage)	
1000		TVRE20 1000/.....(value of secondary voltage)	

V	kg	class 1	
primary voltage	weigth	code (ou R signifie √3)	VA
100:√3	3,45	TVRE20 100R/.....(value of secondary voltage)	10
110:√3		TVRE20 110R/.....(value of secondary voltage)	
115:√3		TVRE20 115R/.....(value of secondary voltage)	
230:√3		TVRE20 230R/.....(value of secondary voltage)	
380:√3		TVRE20 380R/.....(value of secondary voltage)	
400:√3		TVRE20 400R/.....(value of secondary voltage)	
440:√3		TVRE20 440R/.....(value of secondary voltage)	
500:√3		TVRE20 500R/.....(value of secondary voltage)	
600:√3		TVRE20 600R/.....(value of secondary voltage)	
800:√3		TVRE20 800R/.....(value of secondary voltage)	
1000:√3		TVRE20 1000R/.....(value of secondary voltage)	

TVRE50

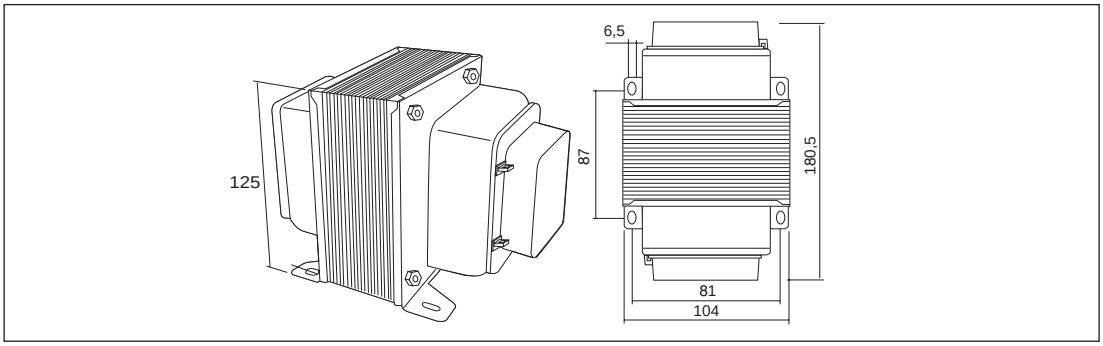

V	kg	class 1	
primary voltage	weigth	code	VA
100	6,35	TVRE50 100/.....(value of secondary voltage)	50
110		TVRE50 110/.....(value of secondary voltage)	
115		TVRE50 115/.....(value of secondary voltage)	
230		TVRE50 230/.....(value of secondary voltage)	
380		TVRE50 380/.....(value of secondary voltage)	
400		TVRE50 400/.....(value of secondary voltage)	
440		TVRE50 440/.....(value of secondary voltage)	
500		TVRE50 500/.....(value of secondary voltage)	
600		TVRE50 600/.....(value of secondary voltage)	
800		TVRE50 800/.....(value of secondary voltage)	
1000		TVRE50 1000/.....(value of secondary voltage)	

V	kg	class 1	
primary voltage	weigth	code (ou R signifie √3)	VA
100:√3	6,35	TVRE50 100R/.....(value of secondary voltage)	25
110:√3		TVRE50 110R/.....(value of secondary voltage)	
115:√3		TVRE50 115R/.....(value of secondary voltage)	
230:√3		TVRE50 230R/.....(value of secondary voltage)	
380:√3		TVRE50 380R/.....(value of secondary voltage)	
400:√3		TVRE50 400R/.....(value of secondary voltage)	
440:√3		TVRE50 440R/.....(value of secondary voltage)	
500:√3		TVRE50 500R/.....(value of secondary voltage)	
600:√3		TVRE50 600R/.....(value of secondary voltage)	
800:√3		TVRE50 800R/.....(value of secondary voltage)	
1000:√3		TVRE50 1000R/.....(value of secondary voltage)	

TVRE100

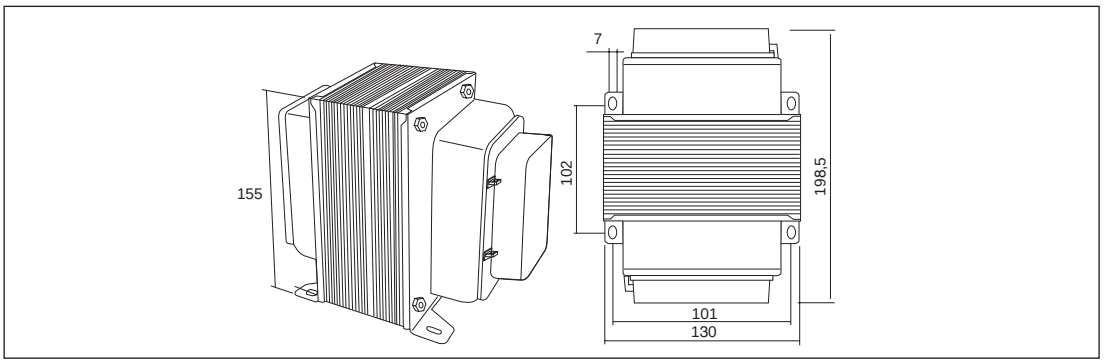

V	kg	class 1	
primary voltage	weigth	code	VA
100 110 115 230 380 400 440 500 600 800 1000	10,15	TVRE100 100/.....(value of secondary voltage) TVRE100 110/.....(value of secondary voltage) TVRE100 115/.....(value of secondary voltage) TVRE100 230/.....(value of secondary voltage) TVRE100 380/.....(value of secondary voltage) TVRE100 400/.....(value of secondary voltage) TVRE100 440/.....(value of secondary voltage) TVRE100 500/.....(value of secondary voltage) TVRE100 600/.....(value of secondary voltage) TVRE100 800/.....(value of secondary voltage) TVRE100 1000/.....(value of secondary voltage)	100

V	kg	class 1	
primary voltage	weigth	code (ou R signifie √3)	VA
100:√3 110:√3 115:√3 230:√3 380:√3 400:√3 440:√3 500:√3 600:√3 800:√3 1000:√3	10,15	TVRE100 100R/.....(value of secondary voltage) TVRE100 110R/.....(value of secondary voltage) TVRE100 115R/.....(value of secondary voltage) TVRE100 230R/.....(value of secondary voltage) TVRE100 380R/.....(value of secondary voltage) TVRE100 400R/.....(value of secondary voltage) TVRE100 440R/.....(value of secondary voltage) TVRE100 500R/.....(value of secondary voltage) TVRE100 600R/.....(value of secondary voltage) TVRE100 800R/.....(value of secondary voltage) TVRE100 1000R/.....(value of secondary voltage)	50

SHUNTS

The purpose of the shunt is to permit the passage of the current which exceeds the capacity of the instrument. The latter will therefore be supplied only with a current which corresponds to its capacity, thus avoiding the risk of damaging the measuring equipment.
The shunts are resistances of very little value and for this reason they are at times formed by conductors with a bar of limited length and substantial rectangular section. For heat dissipation several bars in parallel are used, terminating in two clamps with a large contact surface.
Alongside the two current clamps there are a further two clamps which serve to connect the ammeter.These clamps have lesser section as the current necessary for the instrument is much lower than that of the shunt.
Infact , it is not so much a question of the shunt being parallel with the instrument as the instrument deriving from the clamps of the shunt, of which it utilizes the drop in voltage, withdrawing a part of the current of the circuit, proportionate with the total current.

TECHNICAL CHARACTERISTICS

STANDARDS
- Electrical characteristics: CENELEC HD 233, CEI 13-6, IEC 51, VDE 0410, BS 89, C 42-100
- Safety regulations: CENELEC HD 215, CEI 13-10, IEC 414, DIN 57410, BS 5458, C 42-010
- Dimensions DIN 43703

MATERIALS
- Body: Brass OT58 - UNI 4892
- Derivation with Manganina 43
- Accessories: zinc-iron 8.8

TEMPERATURES
- Referred temperature: 20°C ± 10°C respecting the precision of their class
- Working temperature: -25°C ÷ +60°C
- Storage temperature: -40°C ÷ +80°C
- Temperature's coefficient: 0,002% for each °C

HUMIDITY
- Relative humidity of the ambient ≤ 95%

PRECISION
- Class 0,5

OVERLOAD
- 1,2 In continuously
- 10 In for 5 seconds up to 250A
  5 In for 5 seconds from 300 to 2000A
  2 In for 5 seconds from 2500 to 6000A

RESISTANCE OF MANGANINE / TEMPERATURE

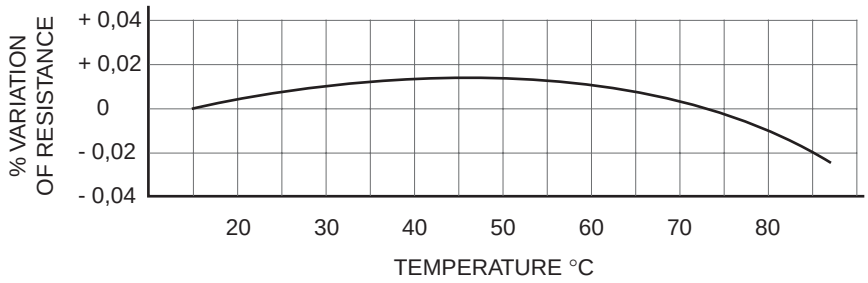

GENERAL
- Standard application: 60 mV and 150 mV
  The 60mV shunts are used with a maximum load of 0,25 ohm ; in the case of greater loads or long connection cables, the 150mV shunts should be used.
- Standards require the following primary values: 1 - 1,5 - 2,5 - 4 - 6 - 10 - 15 - 25 - 40 - 60 - 100 - 150 - 250 - 400 - 600 - 1000 - 1500 - 2500 - 4000 - 6000 - 10000 - 15000 A. Primary values different from the standard can be manufactured on request.
- To ensure the unit functions perfectly Revalco insists the following points are observed:
  1. They can be fitted in either a horizontal or vertical position (if horizontal there is a greater dissipation of heat)
  2. The contact surface must be completely used.
  3. The contact surface must be clean; after connecting, cover with special grease.
  4. The screws and bolts must be perfectly tightened.
  5. The shunts must be sufficiently ventilated.
- Due the fact that the shunts are not insulated, it is better to protect them against accidental contacts.

CODES LEGEND
- Code SH1K0A60MV identify a 1000A/60mV shunt
  Code SH1K5A60MV identify a 1500A/60mV shunt
  Code SH10KA60MV identifv a 10000A/60mV shunt
  Code SH1K2A150MV identify a 1200A/150mV shunt
  Code SH5K0A60MV identify a 5000A/60mV shunt

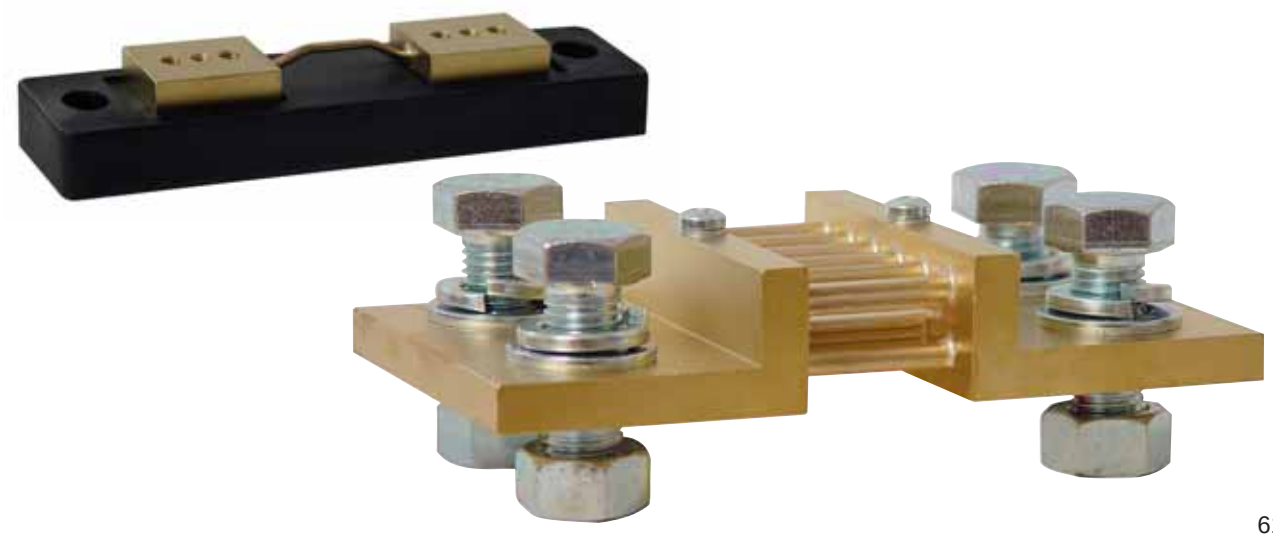

secondary 60 mV

SH1A60MV ÷ SH25A60MV

- Fixing packs:
  2 screws M5x8 DIN 933 + 2 screws M5x12 DIN 933 + 4 washers M5 DIN 125A
- weight: 0,11 Kg

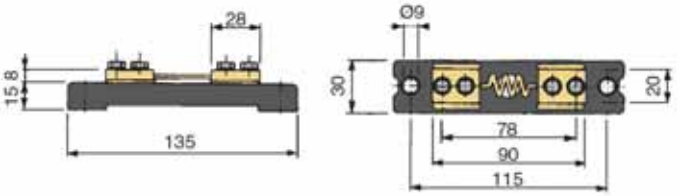

SH30A60MV ÷ SH200A60MV

- Fixing packs:
  2 screws M5x8 DIN 933 + 2 screws M8x16 DIN 933
  + 2 washers M5 DIN 125A + 2 washers M8 DIN 125A
- Weight: 0,14 Kg

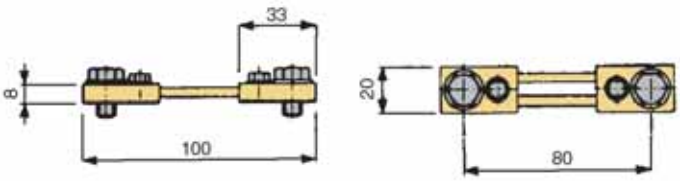

SH250A60MV ÷ SH350A60MV

- Fixing packs:
  2 screws M5x8 DIN 933 + 2 screws M12x40 DIN 933 + 2 nuts M12 DIN 934
  + 2 washers M5 DIN 125A + 2 washers M12 DIN 125A
  + 2 grower washers M12 DIN 127B
- Weight: 0,53 Kg

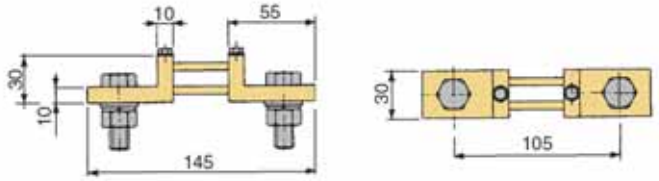

SH400A60MV ÷ SH700A60MV

- Fixing packs:
  2 screws M5x8 DIN 933 + 2 screws M16x45 DIN 933 + 2 nuts M16 DIN 934
  + 2 washers M5 DIN 125A + 2 washers M16 DIN 125A
  + 2 grower washers M16 DIN 127B
- Weight: 0,80 Kg

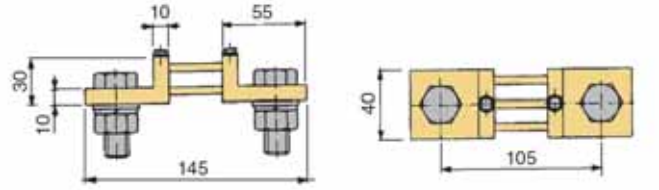

SH750A60MV ÷ SH1K0A60MV

- Fixing packs:
  2 screws M5x8 DIN 933 + 2 screws M20x50 DIN 933 + 2 nuts M20 DIN 934
  + 2 washers M5 DIN 125A + 2 washers M20 DIN 125A
  + 2 grower washers M20 DIN 127B
- Weight: 1,40 Kg

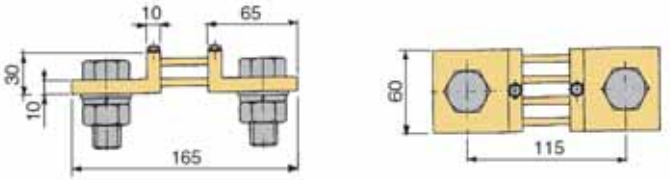

secondary 150 mV

SH1A150MV ÷ SH25A150MV

- Fixing packs:
  2 screws M5x8 DIN 933 + 2 screws M5x12 DIN 933 + 4 weight M5 DIN 125A
- Peso: 0,11 Kg

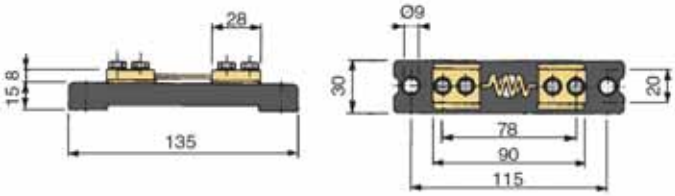

SH30A150MV ÷ SH200A150MV

- Fixing packs:
  2 screws M5x8 DIN 933 + 2 screws M8x16 DIN 933
  + 2 washers M5 DIN 125A + 2 washers M8 DIN 125A
- Weight: 0,20 Kg

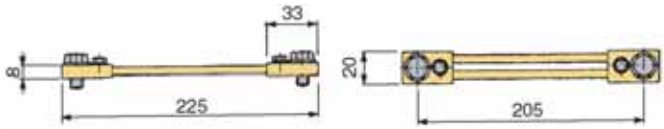

SH250A150MV ÷ SH350A150MV

- Fixing packs:
  2 screws M5x8 DIN 933 + 2 screws M12x40 DIN 933 + 2 nuts M12 DIN 934
  + 2 washers M5 DIN 125A + 2 washers M12 DIN 125A
  + 2 grower washers M12 DIN 127B
- Weight: 0,65 Kg

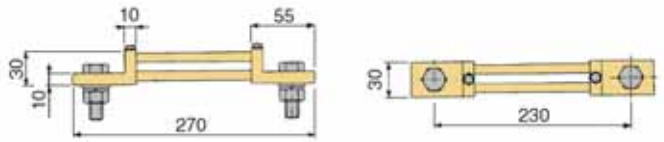

SH400A150MV ÷ SH700A150MV

- Fixing packs:
  2 screws M5x8 DIN 933 + 2 screws M16x45 DIN 933 + 2 nuts M16 DIN 934
  + 2 washers M5 DIN 125A + 2 washers M16 DIN 125A
  + 2 grower washers M16 DIN 127B
- Weight: 0,95 Kg

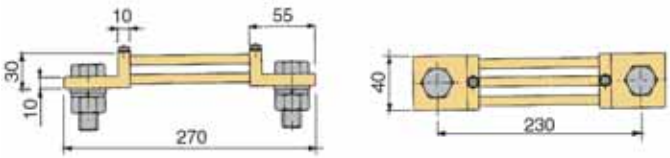

SH750A150MV ÷ SH1K0A150MV

- Fixing packs:
  2 screws M5x8 DIN 933 + 2 screws M20x50 DIN 933 + 2 nuts M20 DIN 934
  + 2 washers M5 DIN 125A + 2 washers M20 DIN 125A
  + 2 grower washers M20 DIN 127B
- Weight: 1,55 Kg

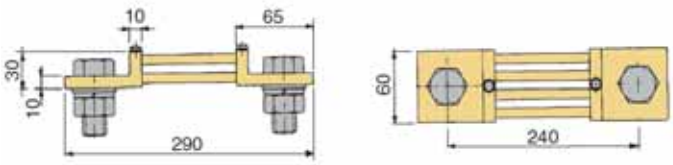

secondary 60 mV

SH1K2A60MV ÷ SH1K5A60MV

- Fixing packs:
  2 screws M5x8 DIN 933 + 4 screws M16x45 DIN 933 + 4 nuts M16 DIN 934
  + 2 washers M5 DIN 125A + 4 washers M16 DIN 125A
  + 4 grower washers M16 DIN 127B
- Weight: 1,90 Kg

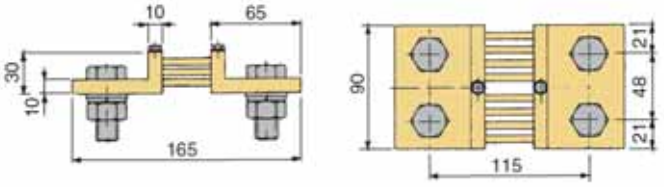

SH2K0A60MV ÷ SH2K5A60MV

- Fixing packs:
  2 screws M5x8 DIN 933 + 4 screws M20x50 DIN 933 + 4 nuts M20 DIN 934
  + 2 washers M5 DIN 125A + 4 washers M20 DIN 125A
  + 4 grower washers M20 DIN 127B
- Weight: 2,75 Kg

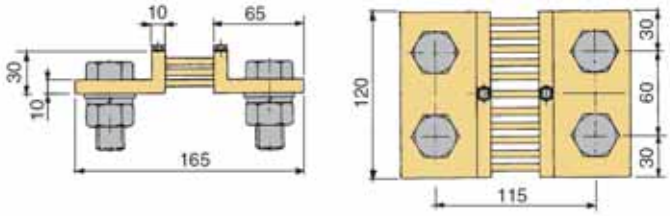

SH4K0A60MV

- Fixing packs:
  2 screws M5x8 DIN 933 + 4 screws M20x60 DIN 933 + 4 nuts M20 DIN 934
  + 2 washers M5 DIN 125A + 4 washers M20 DIN 125A
  + 4 grower washers M20 DIN 127B
- Weight: 4,10 Kg

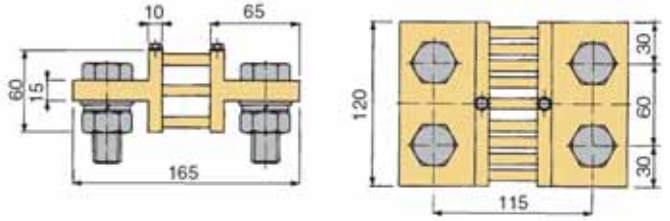

SH5K0A60MV ÷ SH6K0A60MV

- Fixing packs:
  2 screws M5x8 DIN 933 + 6 screws M20x75 DIN 933 + 6 nuts M20 DIN 934
  + 2 washers M5 DIN 125A + 6 washers M20 DIN 125A
  + 6 grower washers M20 DIN 127B
- Weight: 5,00 Kg

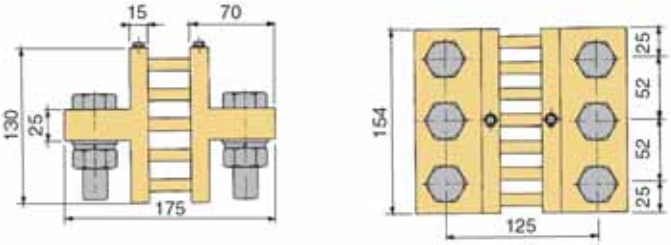

secondary 150 mV

SH1K2A150MV ÷ SH1K5A150MV

- Fixing packs:
  2 screws M5x8 DIN 933 + 4 screws M16x60 DIN 933 + 4 nuts M16 DIN 934
  + 2 washers M5 DIN 125A + 4 washers M16 DIN 125A
  + 4 grower washers M16 DIN 127B
- Weight: 2,20 Kg

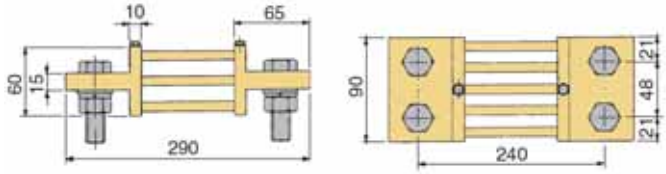

SH2K0A150MV ÷ SH2K5A150MV

- Fixing packs:
  2 screws M5x8 DIN 933 + 4 screws M20x60 DIN 933 + 4 nuts M20 DIN 934
  + 2 washers M5 DIN 125A + 4 washers M20 DIN 125A
  + 4 grower washers M20 DIN 127B
- Weight: 3,10 Kg

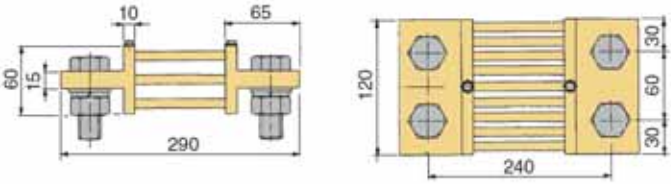

SH4K0A150MV

- Fixing packs:
  2 screws M5x8 DIN 933 + 4 screws M20x75 DIN 933 + 4 nuts M20 DIN 934
  + 2 washers M5 DIN 125A + 4 washers M20 DIN 125A
  + 4 grower washers M20 DIN 127B
- Weight: 4,65 Kg

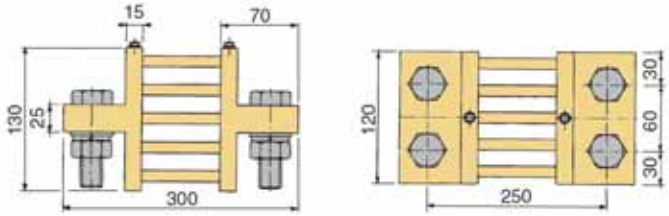

SH5K0A150MV ÷ SH6K0A150MV

- Fixing packs:
  2 screws M5x8 DIN 933 + 6 screws M20x75 DIN 933 + 6 nuts M20 DIN 934
  + 2 washers M5 DIN 125A + 6 washers M20 DIN 125A
  + 6 grower washers M20 DIN 127B
- Weight: 5,60 Kg

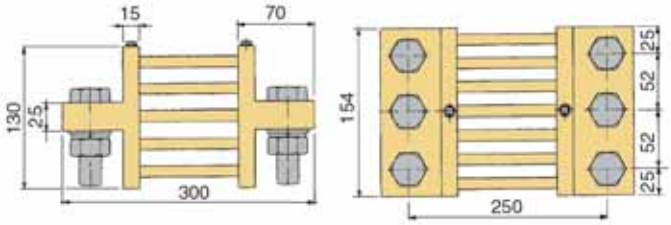

UNI EN ISO 9001:2000 - N° 9105.REVA

Kazakhstan

Gost
Russia

Underwriters
Laboratories Inc. ®
USA
E240753

IMQ

BAUART GEPRÜFT
TYPE APPROVED
TÜV Rheinland Product Safety

55DEIA-GB Ediz. 2009.01.GB - Validity of the catalogue: until the release of a new edition which cancels and replaces the previous one

Revalco®

Via Giorgio Stephenson, 90 - 20157 MILANO ITALY
Telephone ++39 02.39002153 - Fax ++39 02.39002207
E-mail: info@revalco.it - Web site: www.revalco.it